City of Avondale

WELLHEAD TREATMENT STUDY
FINAL REPORT

December 2013

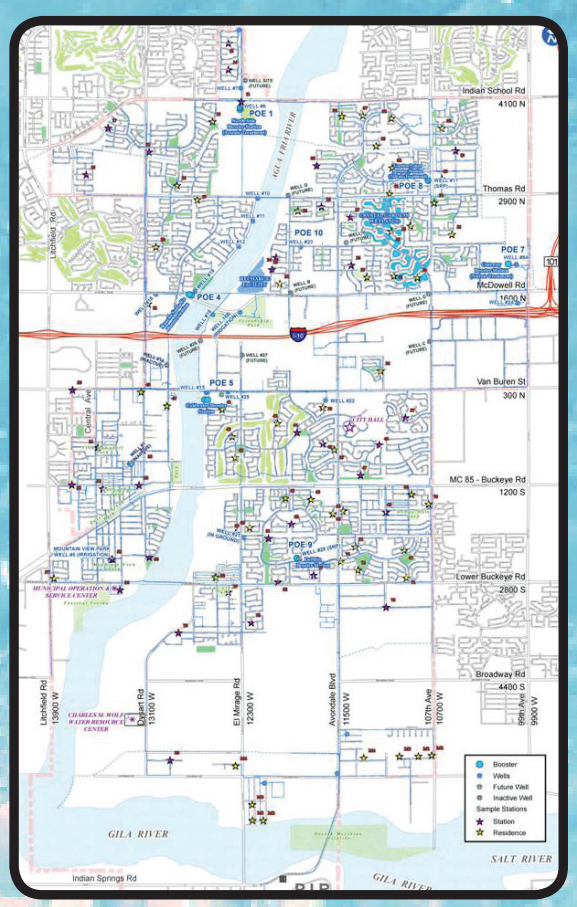

NCS Engineers

202 E. Earll Drive, Suite 110
Phoenix, AZ 85012
(602) 629-0206

Registered Professional Engineer (Civil)
CERTIFICATE NO. 28112
RAMESH NARASIMHAN
Date Signed 12/12/13
ARIZONA, U.S.A.
EXPIRATION DATE: 09/30/15

WELLHEAD TREATMENT STUDY
FINAL REPORT

December 2013

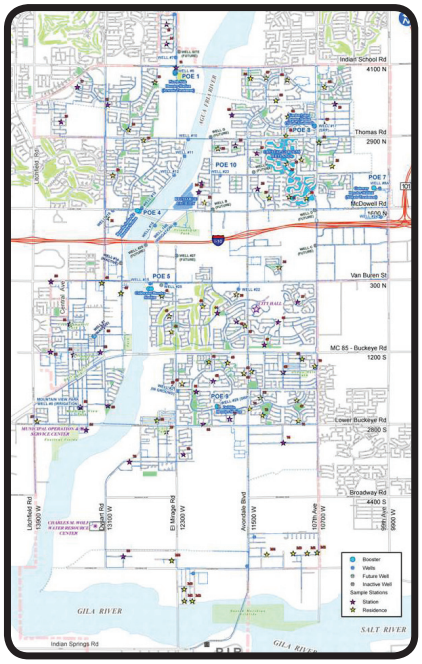

NCS Engineers

202 E. Earll Drive, Suite 110
Phoenix, AZ 85012
(602) 629-0206

Registered Professional Engineer (Civil)
CERTIFICATE NO. 28112
RAMESH NARASIMHAN
Date Signed 12/13/13
ARIZONA, U.S.A.
EXPIRATION DATE: 09/30/15

CITY OF AVONDALE
WELLHEAD TREATMENT STUDY

FINAL REPORT

TABLE OF CONTENTS

EXECUTIVE SUMMARY

CHAPTER 1	INTRODUCTION
CHAPTER 2	DRINKING WATER REGULATORY REQUIREMENTS
CHAPTER 3	WATER QUALITY REVIEW OF IMPACTED WELLS
CHAPTER 4	TREATMENT OPTIONS FOR HEXAVALENT CHROMIUM
CHAPTER 5	TREATMENT OPTIONS FOR TOTAL DISSOLVED SOLIDS
CHAPTER 6	TREATMENT OPTIONS FOR COLDWATER BOOSTER STATION
CHAPTER 7	TREATMENT OPTIONS FOR DEL RIO BOOSTER STATION
CHAPTER 8	GARDEN LAKES WATER PRODUCTION FACILITY ASSESSMENT
CHAPTER 9	GATEWAY WATER PRODUCTION FACILITY ASSESSMENT
CHAPTER 10	SUMMARY OF WELLHEAD TREATMENT STRATEGIES AND TEN YEAR INFRASTRUCTURE PLAN
APPENDIX A	CITY WATER SYSTEM MAP
APPENDIX B	GARDEN LAKES TESTING PROTOCOL
APPENDIX C	GATEWAY TESTING PROTOCOL

EXECUTIVE SUMMARY

CITY OF AVONDALE
WELLHEAD TREATMENT STUDY

December 2013

In January 2013, the City of Avondale (City) commissioned this Wellhead Treatment Study project to assess and prioritize their water treatment needs to ensure a reliable supply. This effort was critical as the City relies on recovered water for its potable water needs. Some of the City wells have water quality issues related to arsenic, nitrate, total dissolved solids (TDS), and iron. Some of the wells also have a possible concern associated with hexavalent chromium (Cr-VI) since it may be regulated in the future.

In this project, a comprehensive wellhead water quality and treatment study was performed to help the City decide how to meet their water demands while complying with all current and future regulations and water quality goals. The following is a brief overview of the Scope of Work for this study. These tasks and the deliverables generated formed the basis for preparing the chapters in this Final Report.

Task 1 - Water Quality Data Review of Impacted Wells: NCS prepared a summary of current and anticipated SDWA regulations; and reviewed historical and current water quality data for wells identified by the City.

Task 2 - Develop Treatment Options at Coldwater Booster Station: NCS evaluated existing operations, assessed applicable nitrate treatment technologies, and reviewed these findings with the City to identify a preferred treatment solution.

Task 3 - Develop Treatment Options at Del Rio Booster Station: NCS evaluated existing operations, assessed applicable total dissolved solids (TDS) treatment and brine disposal technologies, and reviewed these findings with the City to identify a preferred treatment solution.

Task 4 - Develop Treatment Options for Hexavalent Chromium: NCS evaluated City wells for potential impact of USEPA's anticipated future MCL for Chromium-VI, assessed applicable treatment technologies, and reviewed these findings with the City to identify a preferred treatment solution.

Task 5 - Develop Treatment Options for Total Dissolved Solids: NCS evaluated City wells for elevated levels of TDS, assessed applicable treatment technologies, and reviewed these findings with the City to identify a preferred treatment solution. A survey was also performed for communities in the Phoenix metropolitan area that treat for TDS to obtain information on how they handle their brine.

Task 6 - Garden Lakes Water Production Facility Assessment: NCS conducted a site visit, collected and analyzed operations data, assisted the City in conducting baseline testing for the existing facility, conducted bench testing for the spent brine chromium issue, and developed recommendations.

Task 7 - Conduct Treatment Needs Workshop: NCS conducted an interactive workshop with the City staff to present water quality issues, treatment options, capital and operation and maintenance costs, and obtain City input.

Task 8 - Develop Overall Wellhead Treatment Strategies: Based on outcomes of Tasks 1 to 6 and 10, and the workshop, NCS developed wellhead treatment strategies.

Task 9 - Prepare 10-Year Infrastructure Plan and Summary Project Report: NCS compiled information from Tasks 1 to 8 and 10 into a summary report along with a 10-year infrastructure plan.

Task 10 - Gateway Water Production Facility Assessment: NCS conducted a site visit, collected and analyzed existing facility data, and assessed existing waste stream practices.

WATER QUALITY REVIEW OF IMPACTED WELLS

Water quality data was reviewed for the City's wells of concern and entry points to the distribution system (EPDS). Based on the primary and secondary maximum contaminant levels (MCLs), water quality issues were identified as shown in Table ES1:

Table ES1: Wells and Contaminants of Concern

Wells	EPDS Name	Contaminants of Concern
Well 14		Arsenic and Cr-VI (future)
Well 15	CBS	Nitrate and Cr-VI (future)
Well 16	CBS	
Well 16b	CBS	
Well 22	CBS	Nitrate and TDS
Well 25	CBS	Nitrate and TDS
Well 26	CBS	Cr-VI (future)
Pecan Groves Replacement Well	CBS	
Well 21	DBS	Nitrate, TDS, and Iron
Well 28	DBS	Nitrate and TDS
Well 8A	Gateway	Nitrate and DBCP
Well 24	Gateway	Cr-VI (future)
Well 17	Garden Lakes	Nitrate and Cr-VI (future)

CBS - Coldwater Booster Station
DBS - Del Rio Booster Station
Gateway - Gateway Water Production Facility
Garden Lakes - Garden Lakes Water Production Facility
DBCP - Dibromochloropropane

The corresponding water quality issues associated with individual EPDS are as follows:

- Coldwater Booster Station (EPDS 5) - Nitrate and Cr-VI (future).
- Del Rio Booster Station (EPDS 9) - Nitrate, TDS, and iron.
- Gateway Water Production Facility (EPDS 7) - Nitrate, DBCP, and Cr-VI (future).
- Garden Lakes Water Production Facility (EPDS 8) - Nitrate and Cr-VI (future).

TREATMENT OPTIONS FOR HEXAVALENT CHROMIUM

The primary MCL for total chromium is currently 100 ppb. However, due to health effects concerns of Cr-VI, the United States Environmental Protection Agency (USEPA) is considering lowering the primary MCL. The City wells have Cr-VI levels in the range of 1 to 28 ppb. For this study, NCS recommended a potential primary MCL of 10 ppb for Cr-VI. Based on this primary MCL level, Wells 14, 15, 17, 24 and 26 may require Cr-VI treatment or blending. Three treatment technologies including ion exchange with a weak base anion (IX with WBA) resin, ion exchange with a strong base anion (IX with SBA) resin, and reduction coagulation filtration (RCF), were evaluated for Cr-VI removal from well water.

- WBA resin can be used as a "throw away resin" due to its high treatment capacity and long run time. However, the costs of operation associated with raising and lowering the pH for optimal performance are of concern.
- SBA resin would require frequent regeneration and the spent brine disposal may be an issue as chromium levels could be higher than the allowable limit of 5 mg/L for disposal to a landfill. Presence of other constituents such as sulfate, nitrate, arsenic, TDS, radionuclides, etc. may impact the treatment capacity and brine disposal method.
- RCF can be effective but requires a number of chemicals and reactors to achieve the desired results; operations could be complicated. In addition, disposal of sludge may be an issue depending on the chromium level in the sludge.

The capital, annual O&M, and present worth (PW) costs were calculated for IX with WBA, IX with SBA, and RCF treatment alternatives. The cost evaluation was performed for a typical 1,000 gallons per minute (gpm) well and a 20% well utilization rate. Table ES2 presents a cost summary of the above treatment alternatives.

Table ES2: Cost Comparison of Cr-VI Treatment Technologies

Treatment Type	Alternative 1 IX System w/ WBA Resin	Alternative 2 IX System w/SBA Resin*	Alternative 3 RCF System
Treatment Capacity, gpm	1,000	1,000	1,000
Capital Cost	$2,310,500	$2,297,500	$3,054,400
Annual O&M Cost	$ 235,000	$ 292,900	$ 177,200
20-year Present Worth Cost	$5,239,000	$5,947,000	$5,262,000

*Annual O&M cost includes spent brine disposal Cost.

The 20-year PW costs for Alternative 1 (IX with WBA Resin) is $5.2 million. Based on cost and non cost factors, Alternative 1 - IX with WBA is recommended for Cr-VI removal. Figures ES1 presents a typical process schematic for Alternative 1 - IX with WBA.

Based on a potential future Cr-VI MCL of 10 ppb, the City should plan on the following impacts to their wells:

- The total cost impact of a future Cr-VI regulation to the City would be $4.8 million capital (treatment + land) and $470,000 annual O&M, assuming additional treatment to be installed at Wells 14 and 24, while blending or using existing or planned nitrate treatment facilities are used for concurrent chromium removal at Wells 15, 17, and 26.

- Well 14 would require a Cr-VI treatment facility. The City would have to acquire additional land, approximately 100 feet x 80 feet, for the construction of the facility.
- There are two ways to approach the Cr-VI issue for Wells 15 and 26. If the proposed nitrate treatment at the CBS uses IX technology, no separate Cr-VI treatment would be required. If the nitrate treatment at CBS uses biological treatment, blending would be a preferred solution.
- Well 17 would not require a separate Cr-VI treatment facility as the existing NTF removes a significant amount of Cr-VI from the well water.
- For Well 24, there are two potential approaches to address the Cr-VI issue, one is to construct a Cr-VI treatment facility at the well site and another is to blend Well 24 water with Well 8A. The City would have to acquire additional land, approximately 100 feet x 100 feet, adjacent to the well site for the construction of the Cr-VI treatment facility. Blending would be an option if the treatment capacity at Well 8A is expanded from the current 2,000 gpm to 3,000 gpm. The blended water Cr-VI level would be approximately 7.7 ppb. If blending is chosen as the preferred alternative, the City cannot utilize Well 24 when Well 8A is out of service.

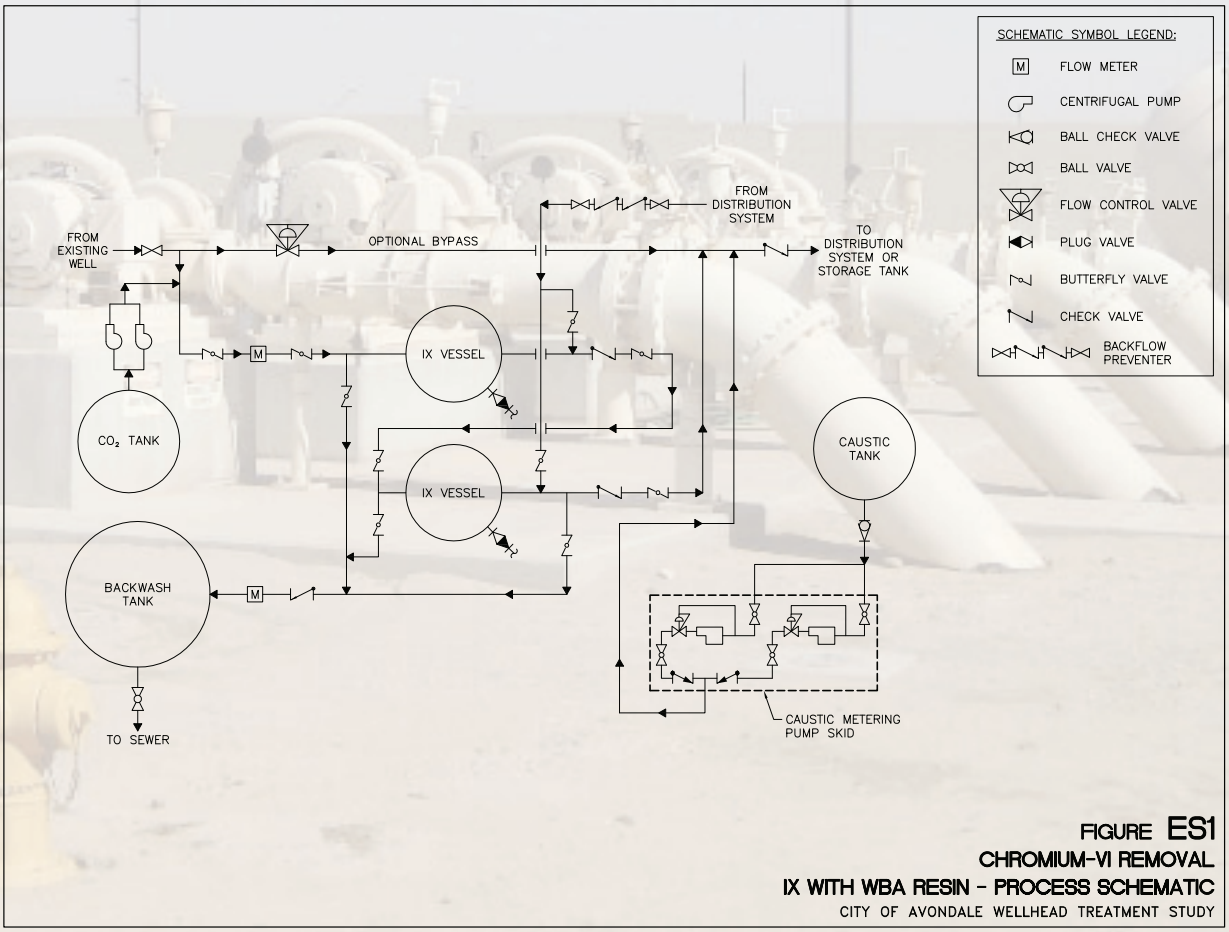

FIGURE ES1
CHROMIUM-VI REMOVAL
IX WITH WBA RESIN - PROCESS SCHEMATIC
CITY OF AVONDALE WELLHEAD TREATMENT STUDY

TREATMENT OPTIONS FOR TOTAL DISSOLVED SOLIDS

City wells serving the DBS have elevated levels of TDS with concentrations up to 1,500 mg/L +/-. Elevated TDS levels generally indicate hard and corrosive water which can cause scale buildup in the distribution system, hot water heaters, and household plumbing and fixtures. Although

elevated TDS does not have any adverse health effects, it can result in unpleasant tastes at higher concentrations (> 1,000 mg/L). The USEPA does not define a primary MCL for TDS, but the secondary MCL for TDS is 500 mg/L. For this study, a goal of 750 mg/L was established for TDS in potable water.

As a part of this study, electrodialysis reversal (EDR), reverse osmosis (RO), and RO with softening were evaluated as potential treatment alternatives for TDS, as summarized below:

- Electrodialysis (ED) is an electro-membrane process in which ions are transported through ion permeable membranes from one solution to another under the influence of a potential gradient. ED membranes are subject to scaling and fouling. However, EDR systems periodically reverse the polarity of the electric field to help flush scale forming ions off the membrane surface and minimize membrane cleaning. Based on the well water quality, EDR is expected to provide a water recovery rate of 90% with a TDS concentration of 355 mg/L in the EDR permeate (treated water).
- RO utilizes an applied pressure to overcome osmotic pressure to pass water through semi permeable membranes. Brine is retained on the pressurized side of the membrane and water is allowed to pass across the membrane. For the City, RO is expected to provide a water recovery rate of 80% with a TDS concentration of 80 mg/L in the RO permeate.
- Softening is a process of removing multivalent cations from hard water. Softening by itself may not be an effective method for TDS reduction. However, many prior studies have shown that softened water improves the RO recovery and prevents membrane fouling. Therefore, softening with RO was considered as one of the alternatives.

The capital, annual O&M, and 20-year PW costs for TDS treatment alternatives are presented in Table ES3. The RO system appears to be the most economical option with a 20-year PW costs of $6.0 million. The capital and annual O&M costs for the RO system are calculated at $3.7 million and $188,600, respectively. Figure ES2 presents the RO system process schematic. Based on cost and non cost factors, RO is recommended for TDS treatment of the DBS wells.

Table ES3: Cost Comparison of TDS Treatment Technologies

Treatment Alternatives	Total Well Flow, gpm	Treatment Capacity, gpm	Capital Cost	Annual O&M Cost	20-Year Present Worth Cost
EDR*	2,100	1,450	$6,647,500	$250,700	$ 9,771,200
Reverse Osmosis*	2,100	1,250	$3,666,900	$188,600	$ 6,016,900
RO with Softening*	2,100	1,200	$5,563,200	$756,100	$14,984,200

* Partial stream treatment is required.

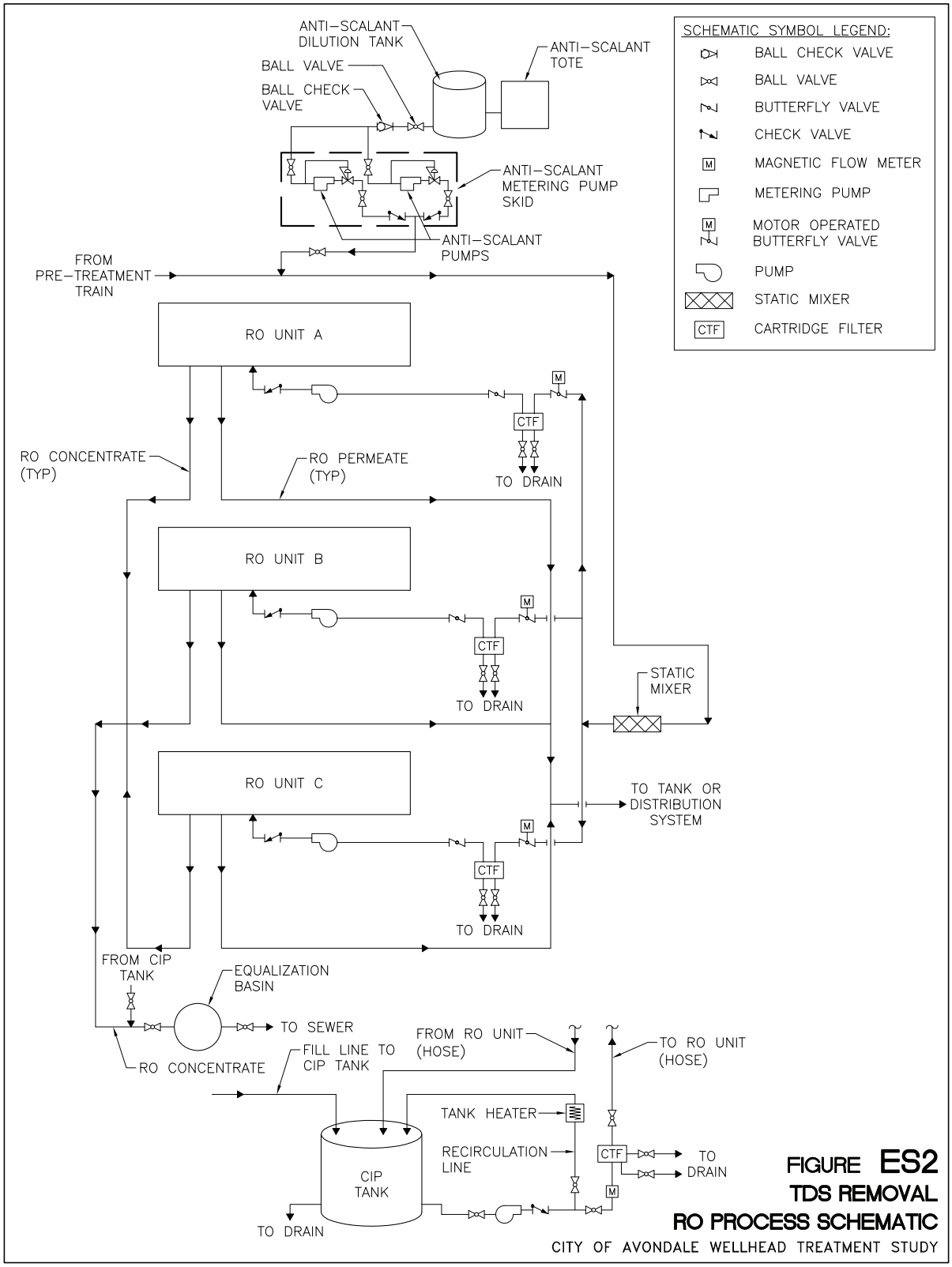
SCHEMATIC SYMBOL LEGEND:
BALL CHECK VALVE
BALL VALVE
BUTTERFLY VALVE
CHECK VALVE
MAGNETIC FLOW METER
METERING PUMP
MOTOR OPERATED BUTTERFLY VALVE
PUMP
STATIC MIXER
CARTRIDGE FILTER
ANTI-SCALANT DILUTION TANK
ANTI-SCALANT TOTE
BALL VALVE
BALL CHECK VALVE
ANTI-SCALANT METERING PUMP SKID
ANTI-SCALANT PUMPS
FROM PRE-TREATMENT TRAIN
RO UNIT A
RO UNIT B
RO UNIT C
CTF
TO DRAIN
RO CONCENTRATE (TYP)
RO PERMEATE (TYP)
STATIC MIXER
TO TANK OR DISTRIBUTION SYSTEM
FROM CIP TANK
EQUALIZATION BASIN
TO SEWER
RO CONCENTRATE
FILL LINE TO CIP TANK
FROM RO UNIT (HOSE)
TO RO UNIT (HOSE)
TANK HEATER
RECIRCULATION LINE
CIP TANK
TO DRAIN
FIGURE ES2
TDS REMOVAL
RO PROCESS SCHEMATIC
CITY OF AVONDALE WELLHEAD TREATMENT STUDY

All of the TDS removal technologies, including RO, EDR, and RO with softening, produce residual streams termed as brine/concentrate which must be disposed in an environmentally acceptable manner. RO brine disposal alternatives that were evaluated were evaporation ponds, mechanical vapor recompression evaporator (MVRE) with evaporation ponds, and regional sewer disposal. Table ES4 compares the capital and annual O&M costs for these technologies. Regional sewer disposal is the most economical alternative and recommended for brine disposal. It is also recommended that a TDS treatment and brine disposal pilot study be conducted in the near future.

Table ES4: Cost Comparison of Brine Treatment/Disposal Technologies

Treatment Alternatives	Capital Cost $/gpd Water Capacity	Annual O&M Cost $/1,000 gallon of Total Water Produced
Evaporation Pond	$3.34	$ 0.85
MVRE with Evaporation Pond	$4.21	$ 3.24
Regional Sewer Disposal	$0.07	$ 0.28

TREATMENT OPTIONS FOR COLDWATER BOOSTER STATION

The CBS has seven wells in its service area: Wells 15, 16, 16b, 22, 25, 26 and the Pecan Groves Replacement Well. Initially, Well 14 was assumed to be part of the CBS, however, due to an elevated arsenic level of 40 ppb it was decided to provide separate wellhead treatment for Well 14. Among other CBS wells, Wells 15, 22, and 25 have elevated nitrate issues. Therefore, it is recommended to construct an arsenic treatment facility (ATF) at Well 14 and a nitrate treatment facility (NTF) at the CBS site.

WELL 14 ARSENIC TREATMENT

Well 14 produces 450 gpm. It pumps directly into the distribution system but has been offline for several years. For arsenic treatment, two treatment processes, adsorption and coagulation-filtration (CF), were evaluated. The capital and annual O&M costs for these alternatives are shown in Table ES5. The adsorption system has lower capital cost and a slightly higher annual O&M cost. However, CF backwash effluent is expected to have an arsenic level of 2 mg/L which is higher than the City's local limit of 0.41 mg/L for arsenic for sewer disposal. As the CF backwash effluent cannot be discharged into sewer and offsite disposal or onsite treatment would be expensive, a single vessel adsorption system is recommended for arsenic removal at Well 14. Figures ES3 and ES4 present the process schematic and site plan, respectively, for the proposed arsenic treatment facility at Well 14.

Table ES5: Cost Comparison of Arsenic Treatment Technologies

Treatment Alternatives	Treatment Capacity, gpm	Capital Cost	Annual O&M Cost	20-Year Present Worth Cost
Alternative 1 - Single Vessel GIM Treatment System (Adsorption)*	450	$802,100	$44,200	$1,353,000
Alternative 2 - CF Treatment System*	450	$811,100	$39,000	$1,297,000

*Full Stream Treatment.

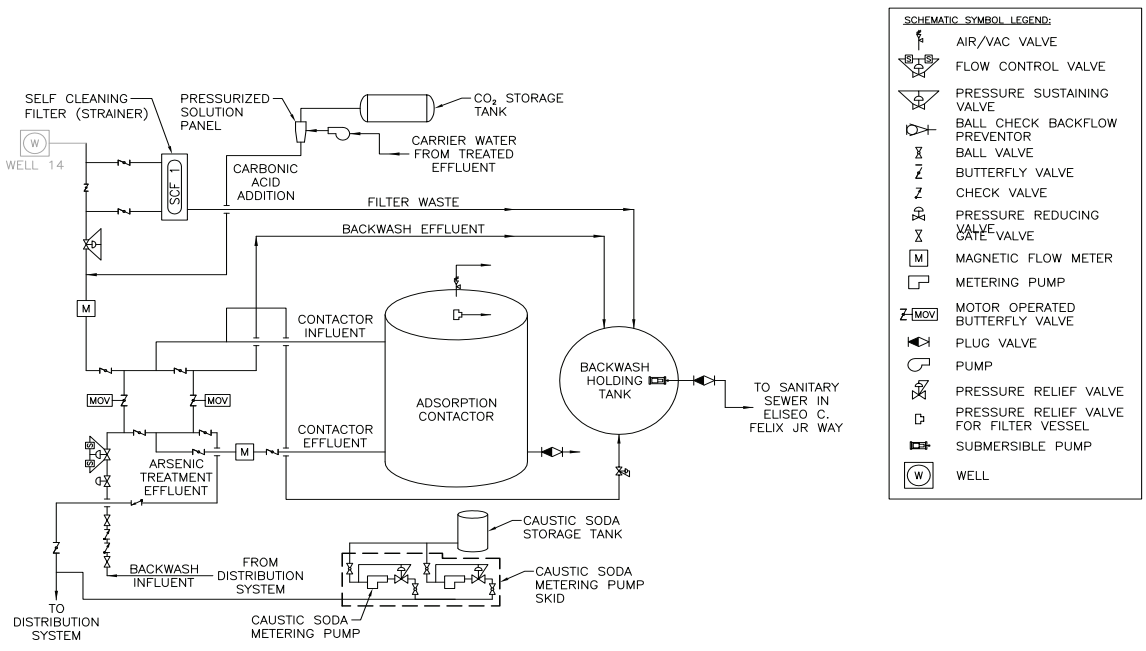

FIGURE ES3
WELL 14 ARSENIC REMOVAL
ADSORPTION SYSTEM PROCESS SCHEMATIC
CITY OF AVONDALE WELLHEAD TREATMENT STUDY

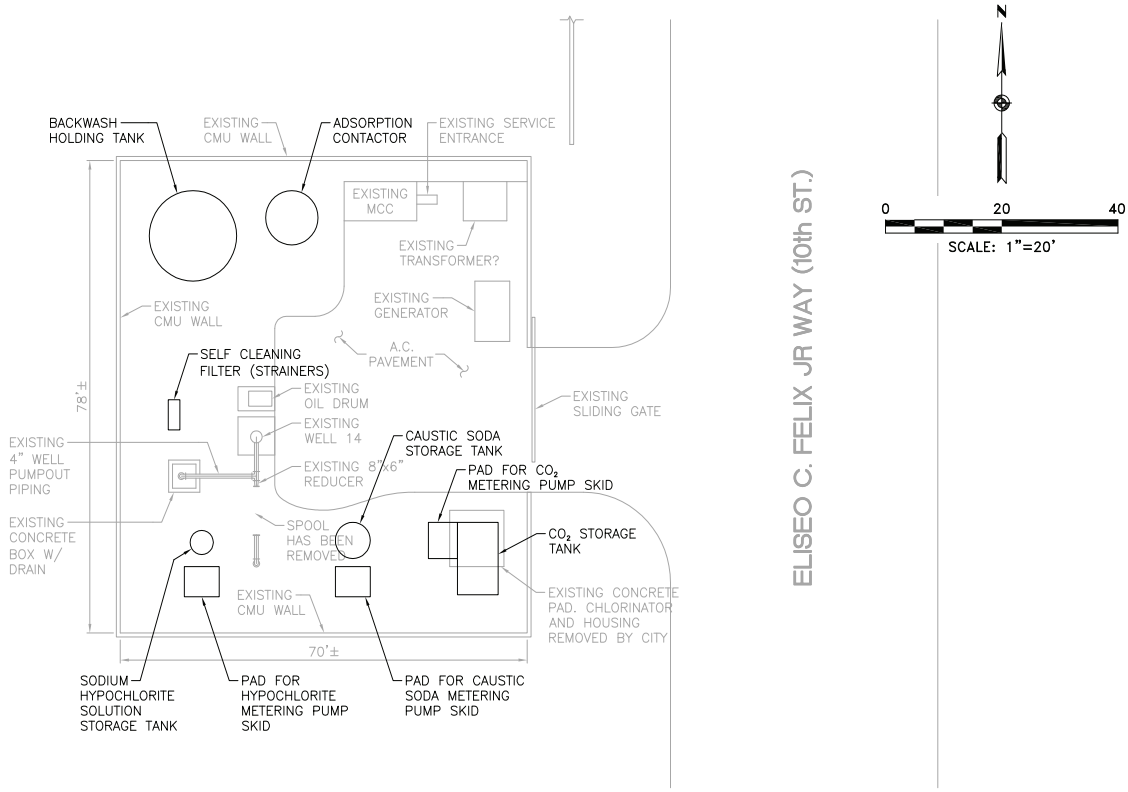

FIGURE ES4
WELL 14 ATF SITE PLAN
CITY OF AVONDALE WELLHEAD TREATMENT STUDY

CBS NITRATE TREATMENT

The flow and water quality data for Wells 15, 16, 16b, 22, 25, 26, and the Pecan Groves Replacement Well were used for the evaluation of nitrate treatment technologies for the CBS. Based on an analysis of all potential well combinations to identify the critical operating condition, the proposed NTF was sized for 1,460 gpm and influent water nitrate level of 12.5 mg/L (with a bypass flow of 1,590 gpm). The following four technologies were considered for the NTF at CBS:

- Alternative 1 - Ion Exchange using Nitrate Selective Resin (IX w/ NSR).
- Alternative 2 - Ion Exchange using Standard Anion Exchange Resin (IX w/ SSR).
- Alternative 3 - Reverse Osmosis.
- Alternative 4 - Biological Nitrate Removal.

RO can remove nitrate from the well water, however, it is more economical and viable to use if TDS is also a concern. As TDS is not a major issue at CBS, RO was eliminated from consideration for nitrate treatment. Table ES6 presents the capital, annual O&M, and 20-year PW costs for Alternatives 1, 2, and 4. Alternative 4 - Biological Nitrate Removal has the lowest capital, annual O&M, and 20-year PW costs. However, this technology is fairly new and should be pilot tested before consideration for implementation. Alternative 1 - IX w/ NSR is the second most economical option and has 20-year PW costs of $7.0 million. For the CBS nitrate treatment facility, it is recommended to pilot test both biological nitrate removal and IX with NSR. The final selection of technology will be dependent on the pilot study test results. The approximate cost of pilot testing is $175,000. For capital improvement budgeting purposes, Alternative 1 - IX w/ NSR is considered as the recommended treatment option. Figures ES5 and ES6 present the process schematic and site plan, respectively, for the IX with NSR treatment facility at the Coldwater Booster Station.

Table ES6: Cost Comparison of Nitrate Treatment Technologies

Treatment Type	Alternative 1 IX System w/NSR Resin*	Alternative 2 IX System w/SSR Resin*	Alternative 4 Biological Nitrate Removal*
Total Well Flow, gpm	8,300	8,300	8,300
Increase in Water Capacity, gpm	4,250	4,250	4,250
Treatment Flow Rate (gpm)	1,460	1,460	1,460
Capital Cost	$3,433,400	$3,271,800	$3,562,100
Annual O&M Cost**	$ 282,900	$ 302,300	$ 263,800
20-year Project Worth Cost	$6,958,000	$7,038,000	$6,849,000

* Partial Stream Treatment.
** Spent brine disposal costs are included.

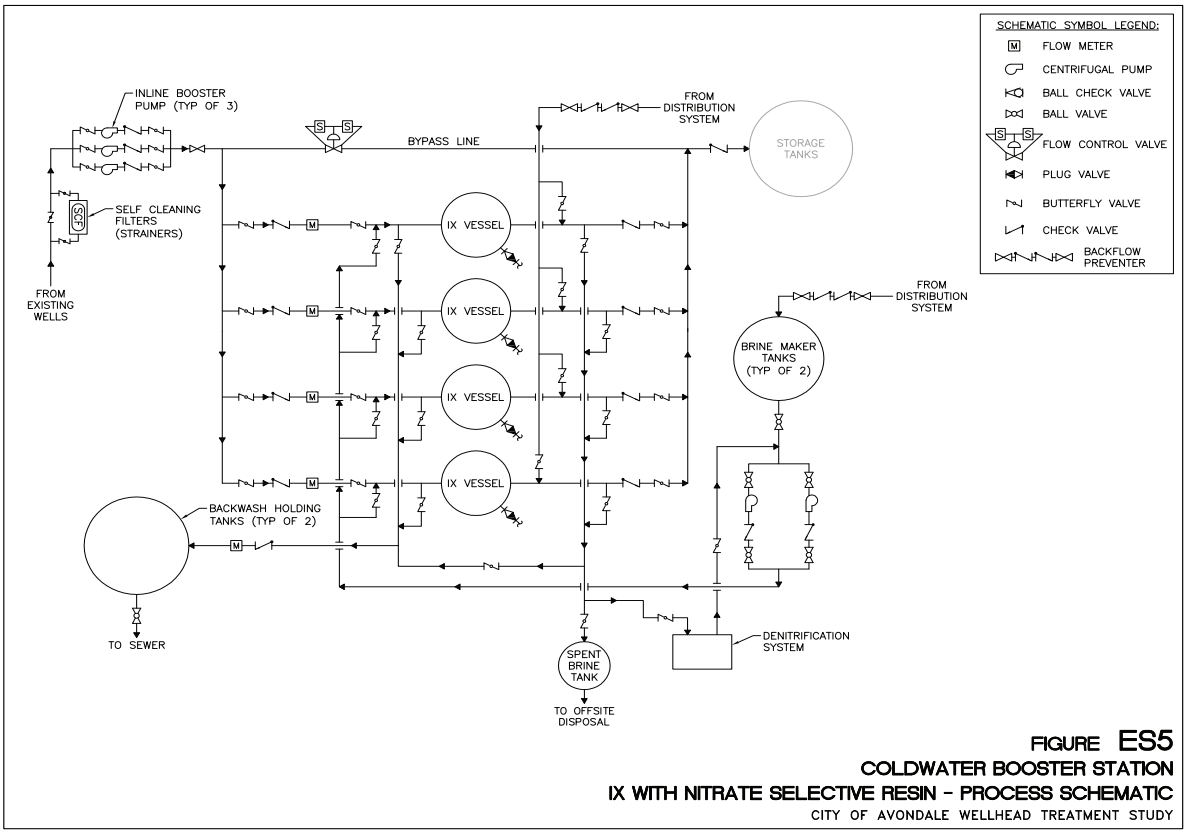

FIGURE ES5
COLDWATER BOOSTER STATION
IX WITH NITRATE SELECTIVE RESIN - PROCESS SCHEMATIC
CITY OF AVONDALE WELLHEAD TREATMENT STUDY

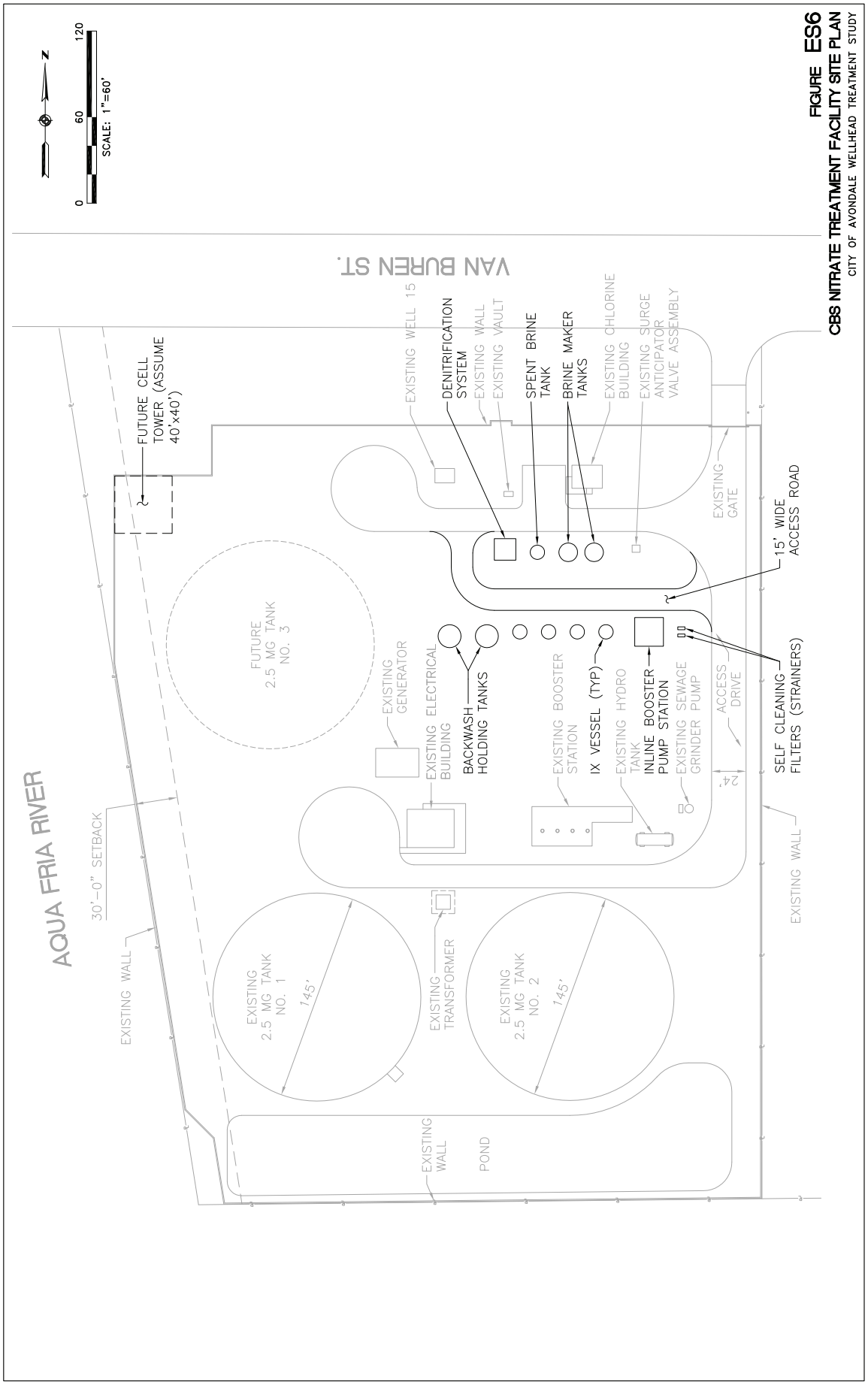

FIGURE ES6
CBS NITRATE TREATMENT FACILITY SITE PLAN
CITY OF AVONDALE WELLHEAD TREATMENT STUDY

TREATMENT OPTIONS FOR DEL RIO BOOSTER STATION

The DBS has been offline for several years due to poor water quality associated with the wells supplying this site. Well 21 has elevated levels of nitrate, TDS, and iron. Well 28 has elevated TDS, and marginal nitrate levels just below the primary MCL. Based on the water quality goals, it was determined an iron removal facility needs to be designed for Well 21 only with the ability to treat Well 28 if Well 21 is offline.

The following three treatment technologies were considered as the most appropriate alternatives for iron removal:

- Chlorination with catalytic media filtration (CCMF).
- Greensand media filtration (GF system).
- Aeration with granular media filtration (AF system).

Table ES7 compares the capital, annual O&M, and 20-year PW costs for these treatment technologies. The 20-year PW costs for the CCMF system is calculated at $4.1 million and is the lowest. The capital and annual O&M costs for the CCMF system were calculated at $2.4 million and $131,000, respectively.

Table ES7: Cost Comparison of Iron Removal Technologies

Treatment Alternatives	Total Well Flow, gpm	Treatment Capacity, gpm	Capital Cost	Annual O&M Cost	20-Year Present Worth Cost
CCMF System	2,100	1,250	$2,427,000	$131,000	$4,059,000
Greensand Media Filtration	2,100	1,240	$3,133,000	$140,000	$4,877,000
Aeration/Filtration	2,100	1,220	$2,976,000	$146,000	$4,795,000

For TDS and iron removal, RO with CCMF is the recommended treatment approach. The capital and annual O&M costs for the DBS treatment facilities (including CCMF and RO) were estimated at $6.5 million and $459,000, respectively. The 20-year PW costs was estimated at $12.2 million. Figures ES7 and ES8 present the process schematic and site plan, respectively, for the recommended treatment facilities at DBS.

The proposed RO facility would generate brine at a flow rate of 250 gpm. As a short to mid term solution for brine disposal, it is proposed to dispose of brine to the regional sewer. It is estimated the wastewater TDS concentration would increase from approximately 1,000 mg/L to approximately 1,107 mg/L at a 26% well utilization rate, and to approximately 1,393 mg/L at a 100% well utilization rate (if discarged to a regional sewer system). As a long term potential solution for brine disposal, it is proposed to develop a land application site with salt tolerant plants (no surface water discharge). A pilot testing program should be performed to determine performance of the salt tolerant plants. The approximate cost for pilot testing RO and EDR for TDS removal, and pilot testing land application for brine disposal is $500,000.

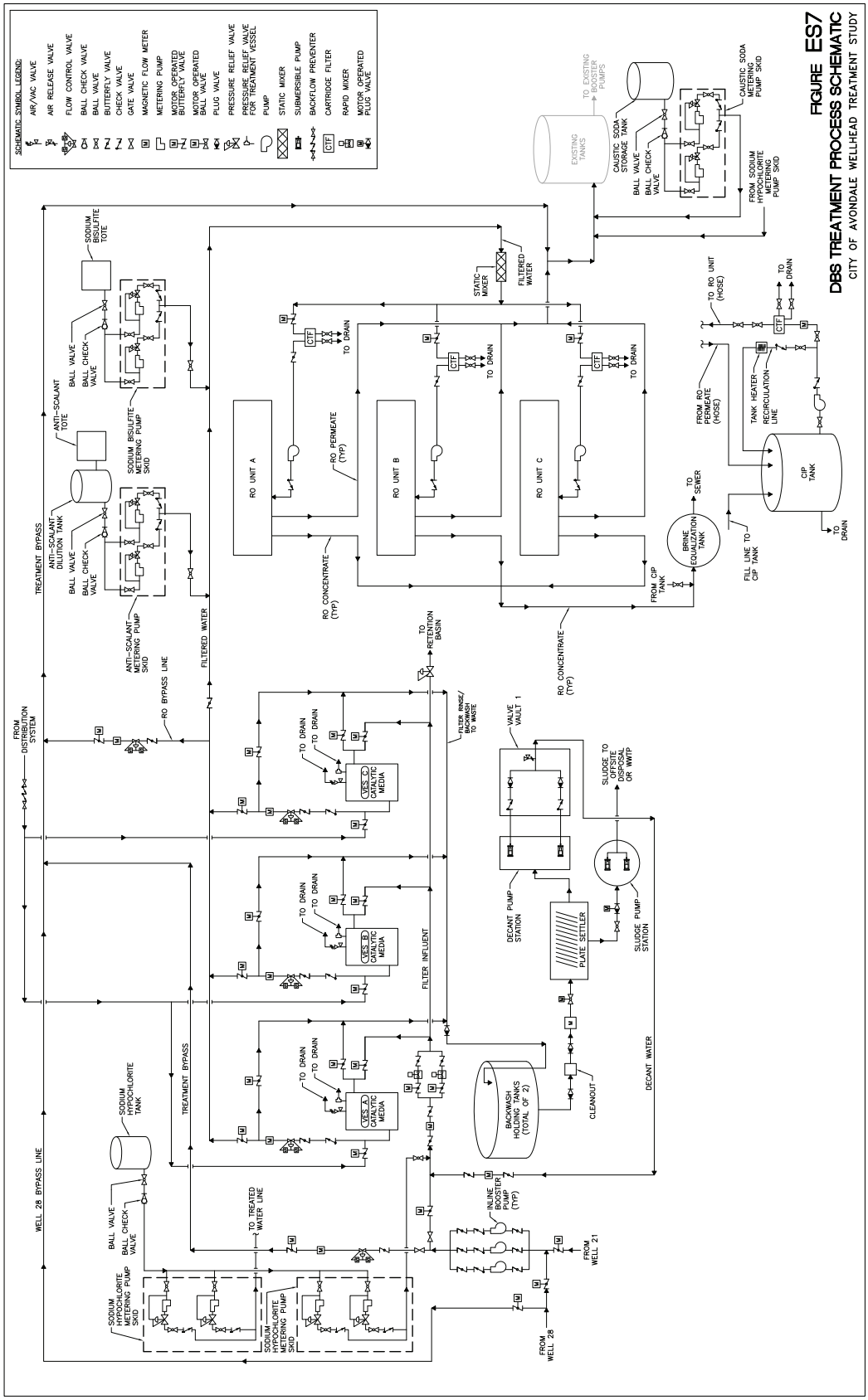
SCHEMATIC SYMBOL LEGEND:
AIR/VAC VALVE
AIR RELEASE VALVE
FLOW CONTROL VALVE
BALL CHECK VALVE
BALL VALVE
BUTTERFLY VALVE
CHECK VALVE
GATE VALVE
MAGNETIC FLOW METER
METERING PUMP
MOTOR OPERATED BUTTERFLY VALVE
MOTOR OPERATED BALL VALVE
PLUG VALVE
PRESSURE RELIEF VALVE
PRESSURE RELIEF VALVE FOR TREATMENT VESSEL
PUMP
STATIC MIXER
SUBMERSIBLE PUMP
BACKFLOW PREVENTER
CARTRIDGE FILTER
RAPID MIXER
MOTOR OPERATED PLUG VALVE
FIGURE ES7
DBS TREATMENT PROCESS SCHEMATIC
CITY OF AVONDALE WELLHEAD TREATMENT STUDY
TO EXISTING BOOSTER PUMPS
EXISTING TANKS
CAUSTIC SODA STORAGE TANK
BALL VALVE
BALL CHECK VALVE
CAUSTIC SODA METERING PUMP SKID
FROM SODIUM HYPOCHLORITE METERING PUMP SKID
SODIUM BISULFITE TOTE
ANTI-SCALANT TOTE
ANTI-SCALANT DILUTION TANK
SODIUM BISULFITE METERING PUMP SKID
ANTI-SCALANT METERING PUMP SKID
TREATMENT BYPASS
FILTERED WATER
STATIC MIXER
RO UNIT A
RO UNIT B
RO UNIT C
RO PERMEATE (TYP)
RO CONCENTRATE (TYP)
TO DRAIN
CTF
TO RO UNIT (HOSE)
FROM RO PERMEATE (HOSE)
TANK HEATER
RECIRCULATION LINE
CIP TANK
BRINE EQUALIZATION TANK
TO SEWER
FILL LINE TO CIP TANK
FROM CIP TANK
FROM DISTRIBUTION SYSTEM
RO BYPASS LINE
TO RETENTION BASIN
FILTER RINSE/ BACKWASH TO WASTE
VESSEL A CATALYTIC MEDIA
VESSEL B CATALYTIC MEDIA
VESSEL C CATALYTIC MEDIA
FILTER INFLUENT
VALVE VAULT 1
SLUDGE TO OFFSITE DISPOSAL OR WWTP
DECANT PUMP STATION
PLATE SETTLER
SLUDGE PUMP STATION
BACKWASH HOLDING TANKS (TOTAL OF 2)
CLEANOUT
DECANT WATER
SODIUM HYPOCHLORITE TANK
WELL 28 BYPASS LINE
TO TREATED WATER LINE
INLINE BOOSTER PUMP (TYP)
FROM WELL 21
FROM WELL 28
SODIUM HYPOCHLORITE METERING PUMP SKID

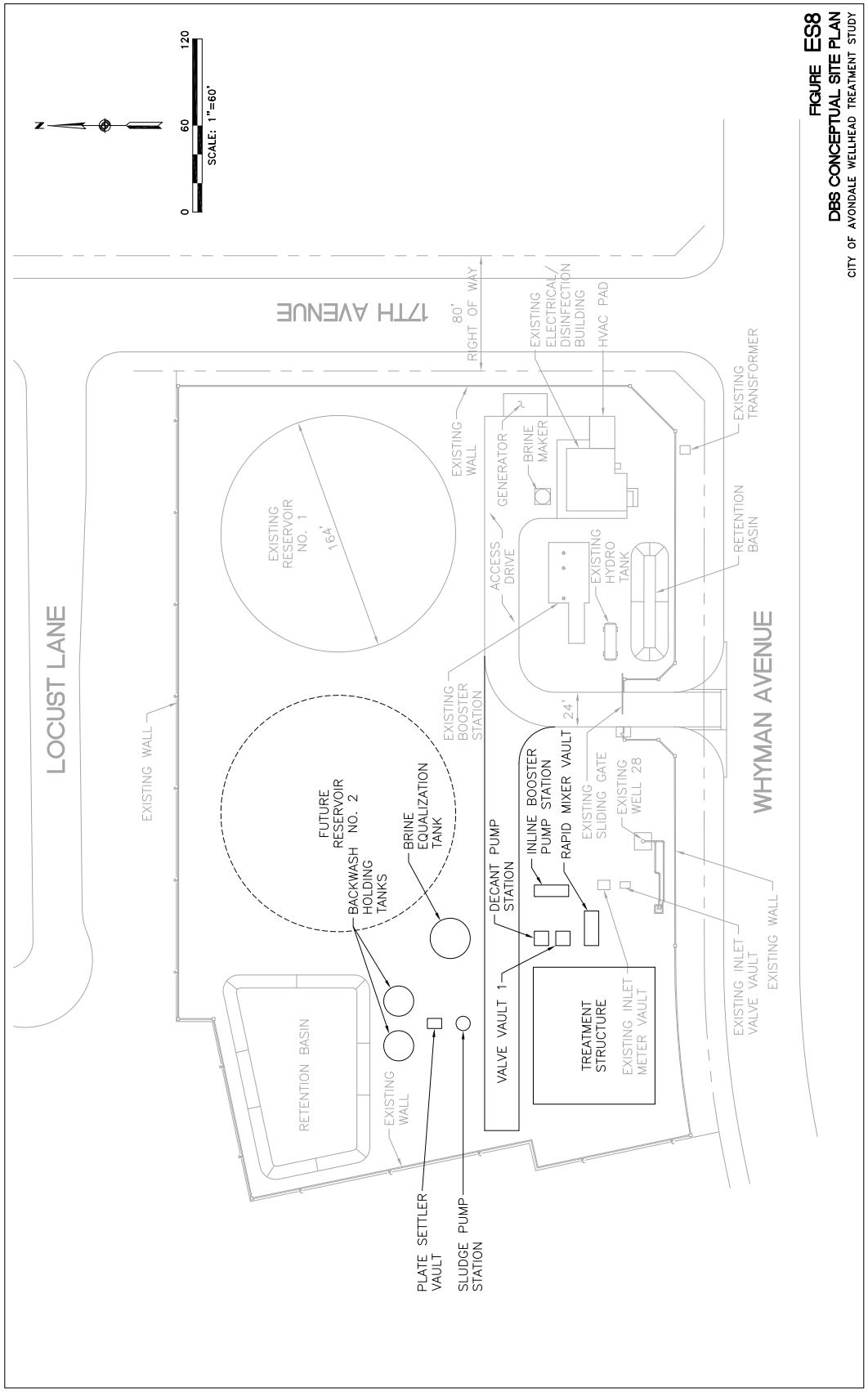

FIGURE ES8
DBS CONCEPTUAL SITE PLAN
CITY OF AVONDALE WELLHEAD TREATMENT STUDY

GARDEN LAKES WATER PRODUCTION FACILITY ASSESSMENT

The Garden Lakes Water Production Facility receives water from Well 17. This well has a nitrate level of 12 mg/L and receives nitrate treatment. At present, the existing NTF is experiencing several regulatory and operational issues including a hazardous waste disposal concern with spent brine, elevated nitrate levels in the treated water, and excess waste stream production.

For the performance evaluation of the existing NTF, a nitrate breakthrough curve was developed (Figure ES9). It shows a rapid increase in treated water nitrate level from 6.2 mg/L at the 12th hour to 11.8 mg/L at the 16th hour for the south bank vessel. If the treated water nitrate goal is assumed at 8 mg/L, Figure ES9 shows the south bank vessel reaches the nitrate treatment goal at approximately 13.5 hours. These results show the existing run length of 700 BVs (26.8 hours) is too long and likely doesn't meet the treated water nitrate goal of 8 mg/L. Therefore, it is recommended to reduce the vessel run length to 340 BVs (13 hours).

Figure ES9 : Nitrate Breakthrough Curve

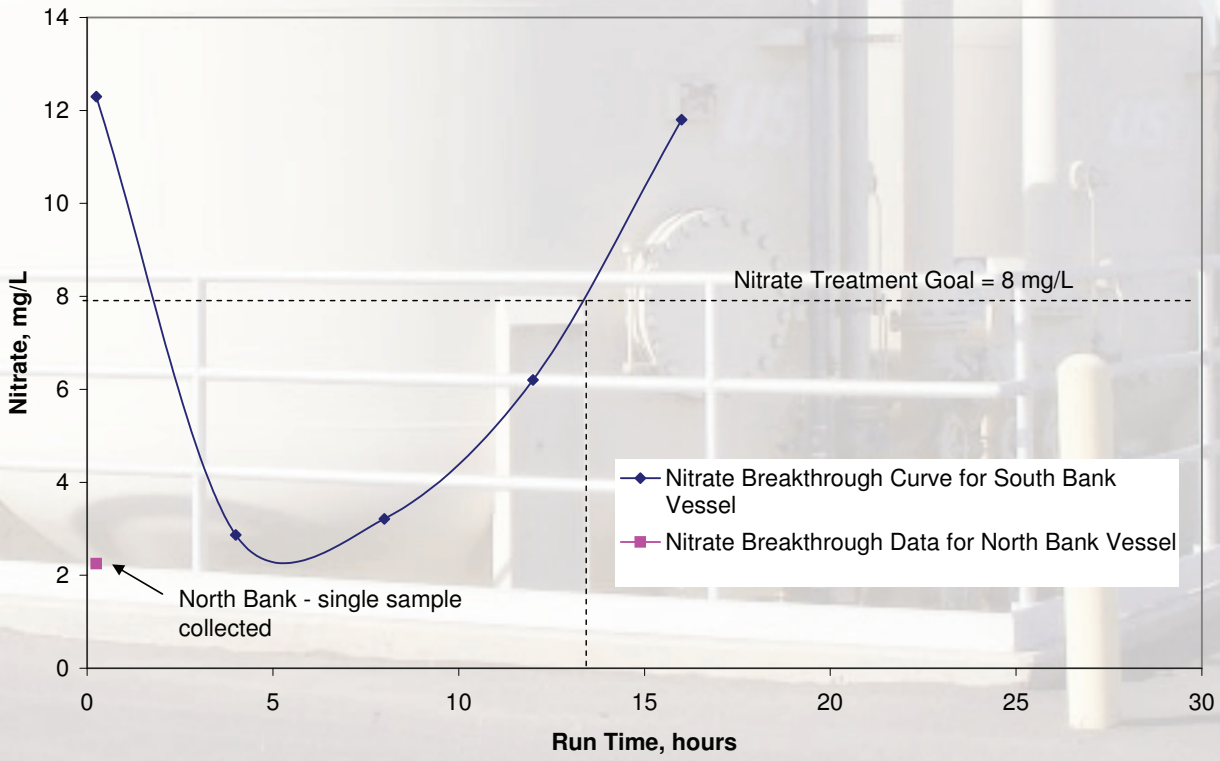

To determine characteristics of the NTF waste, the regeneration/rinse streams were tested. The waste streams were categorized into two streams, spent brine and rinse effluent. At present, both streams discharge into the waste tanks and are periodically disposed of to a solid waste landfill as a non hazardous waste. The field testing shows the spent brine is mainly responsible for high total chromium in the combined waste (spent brine + rinse effluent). Four options were evaluated to address the high total chromium levels in the waste stream: (1) segregation of spent brine stream and disposal as a hazardous waste, (2) reduced IX run length, (3) segregation of spent brine stream and treatment, and (4) change resin type. It was determined that the Option 1 (segregation of spent

brine and disposal as a hazardous waste) would be very expensive as it would cost approximately $340,000 per year just for the spent brine disposal; Option 3 (segregation of spent brine stream and treatment) was not effective for total chromium removal and coagulant doses were very high; and Option 4 (change resin type) would not be effective either as it would still remove a significant amount of total chromium.

Option 2 (reduced IX run length) appears to be the most viable. It is recommended to reduce the run length to between 9 to 13 hours (235 to 340 BVs). A portion of rinse effluent would be used for dilution of spent brine. The excess rinse effluent would be disposed of to the sewer. For Option 2, two scenarios are considered: Scenario 1 with a 9 hour run length and Scenario 2 with a 13 hour run length. Based on a 21% utilization rate for Scenarios 1 and 2, the annual cost for spent brine disposal and salt consumed were calculated at $121,000 and $113,000, respectively. These scenarios will further be evaluated during the optimization study (ongoing field testing and programming adjustment activities) and one of the two scenarios would be implemented.

The field testing performed during this study also revealed that Step 8 of the regeneration/rinse cycle consumes an excessive amount of water (4.8 BVs which is equal to approximately 890 gallons of water per vessel). This water demand could be reduced to 2.5 BVs (463 gallons) without affecting regeneration/rinse efficiency. This could reduce waste volume by 5,700 gallons per day.

If Cr-VI becomes an issue for Well 17, a separate treatment would not be required as the existing NTF should be able to reduce Cr-VI below the anticipated MCL.

GATEWAY WATER PRODUCTION FACILITY ASSESSMENT

The Gateway Water Production Facility treats water from Wells 8A and 24. Well 8A has a nitrate level of 16 mg/L and a DBCP level of 1.1 ppb. Well 8A currently receives both nitrate and DBCP treatment. At this time, Well 24 does not have any significant water quality issues and does not receive any treatment. The average nitrate level for Well 24 is 8.15 mg/L. At present, Well 8A is equipped with a 3,000 gpm well pump, however due to the limited capacity of the existing NTF, the well is operated at 2,000 gpm. The existing NTF is designed to handle a well flow rate of 2,000 gpm. Of the 2,000 gpm well flow rate, 1,300 gpm is passed through the NTF, and the remaining 700 gpm is bypassed and blended with the NTF treated water. After the NTF, the combined treated water (2,000 gpm) is passed through GAC filters. After GAC treatment, Well 8A treated water discharges into the onsite reservoir. Well 24 produces at a flow rate of 750 gpm and discharges into the onsite reservoir.

For the performance evaluation of the existing NTF, nitrate breakthrough curves were developed for the north bank and south bank vessels (one vessel from each bank). The regeneration/rinse streams were also characterized to determine the appropriate disposal method. Figure ES10 shows the nitrate breakthrough curves. The nitrate treatment goal for individual vessels was computed to be 6.5 mg/L. For this goal, the current run length of 265 BVs (9.2 hours) is considerably long. The individual vessels are reaching breakthrough much earlier. In order to meet the combined treated water nitrate goal of 8 mg/L, it is recommended to reduce the vessel run length to 183 BVs (6.5 hours). It is also recommended to discharge rinse effluent to the sewer and spent brine to the waste tanks followed by landfill disposal. If the run length is reduced to 6.5 hours, there may be some increase in operations cost. The annual operations cost for spent brine disposal and salt consumed at a run length of 6.5 hours and a 20% well utilization rate is calculated at $145,600.

Figure ES10 : Nitrate Breakthrough Curve

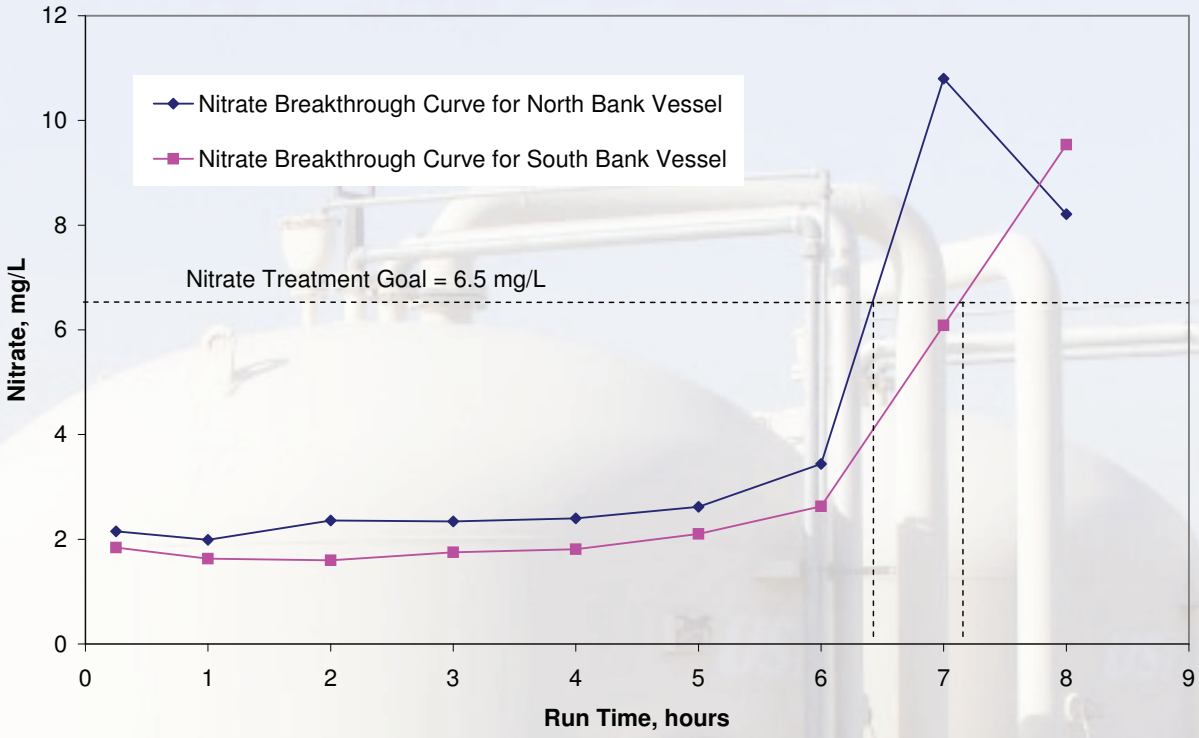

As indicated earlier, Well 8A is equipped with the ability to produce 3,000 gpm, however, due to limited capacity of the existing NTF, it is only pumping at 2,000 gpm. If Well 8A is required to produce at its full capacity, it will require more NTF and GAC facilities to handle the additional flow rate of 1,000 gpm. Per discussions with the City, the following cost scenarios were developed:

1. Additional 1,000 gpm IX system and 1,000 gpm GAC system.
2. Additional 1,700 gpm IX system and 1,000 gpm GAC system (full stream treated).
3. New 3,000 gpm IX system and 1,000 gpm GAC system (full stream treated).

Table ES8 presents the capital, annual O&M, and 20-year PW costs for the additional IX and GAC treatment facilities.

Table ES8: IX and GAC Systems Capital Costs

Scenarios	1,000 gpm IX System	1,700 gpm IX System	3,000 gpm IX System
IX System Capital Cost	$2,336,7000	$2,874,500	$ 4,157,700
1,000 gpm GAC System Capital Cost	$ 550,000	$ 550,000	$ 550,000
Total Capital Cost (IX + GAC)	**$ 2,886,700**	**$3,424,500**	**$ 4,707,700**
Annual O&M Cost (IX + GAC)	$ 224,600	$ 349,700[1]	$ 504,200[2]
20-Year Present Worth Cost (IX + GAC)	$ 5,685,200	$7,781,800	$10,990,000

1. Plus O&M costs for the existing 1,300 gpm IX system and 2,000 gpm GAC system.
2. Plus O&M costs for the existing 2,000 gpm GAC system.

Recently, Well 24 nitrate levels have been trending upward. Given this development, it is desirable to provide full stream treatment for Well 8A and blend with Well 24 water. As the existing NTF equipment (vessels, piping, valves, waste tanks, brine tanks) are in good condition, it is recommended to utilize the existing NTF for its full life. Based on cost and non-cost factors, it is recommended to design additional 1,700 gpm IX and 1,000 gpm GAC systems at Gateway. The City would have to acquire additional land on the east side of the Gateway site. The cost of the additional land is estimated at $125,000. Therefore, the total capital cost associated with the Gateway treatment expansion is $3.5 million ($3.4 million for treatment + $125,000 for land).

Figures ES11 and ES12 present the process schematic and site plan for the proposed 1,700 gpm IX facility and 1,000 GAC facility. As shown on the proposed site plan, the City would have to acquire additional land on the east side of the existing site.

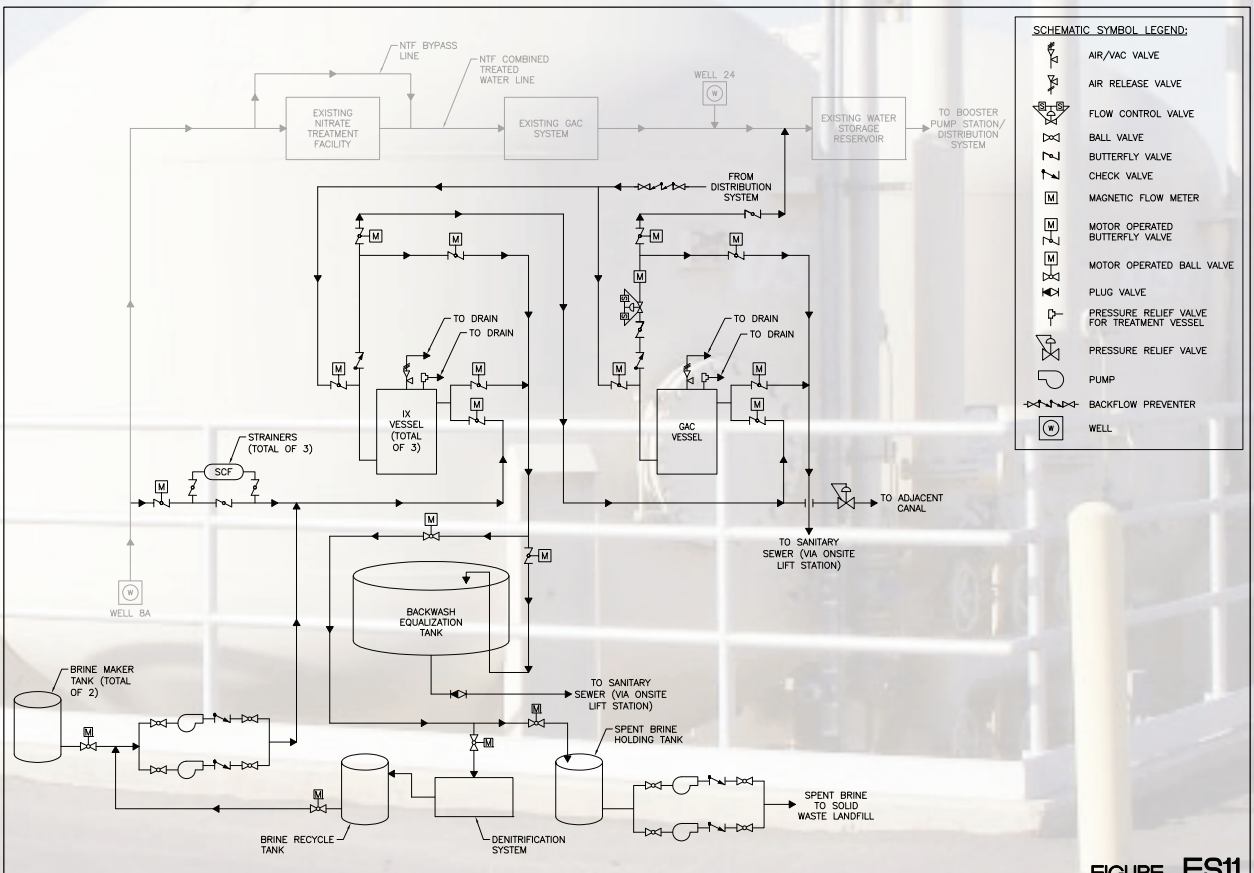

FIGURE ES11

PROCESS SCHEMATIC FOR EXPANSION OF GATEWAY TREATMENT FACILITIES

CITY OF AVONDALE WELLHEAD TREATMENT STUDY

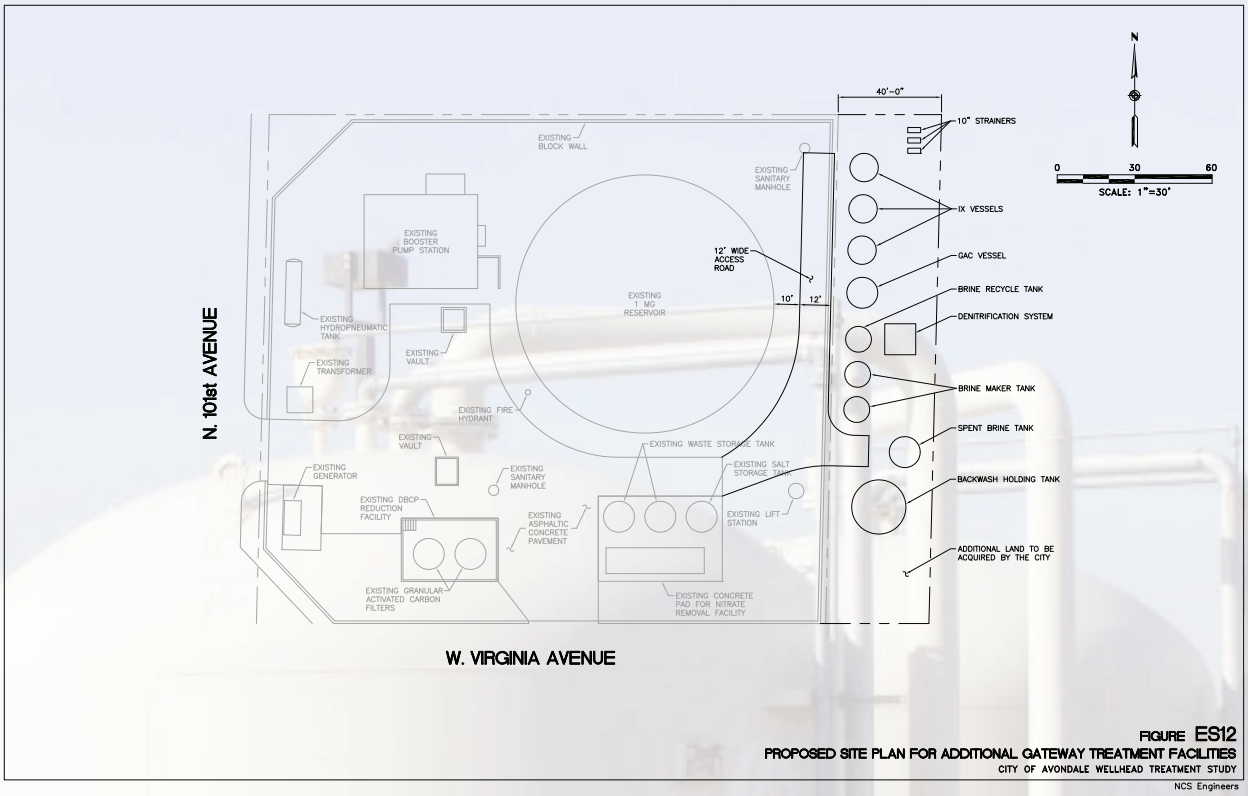

FIGURE ES12
PROPOSED SITE PLAN FOR ADDITIONAL GATEWAY TREATMENT FACILITIES
CITY OF AVONDALE WELLHEAD TREATMENT STUDY
NCS Engineers

If a primary MCL for Cr-VI is promulgated and Well 24 Cr-VI levels are above the primary MCL, either a blending plan or wellhead treatment would be required. If Well 8A continues to produce at 2,000 gpm, the blended water (Well 8A + Well 24) Cr-VI level is expected to be 9.5 ppb. If a nitrate and DBCP treatment facility is constructed for another 1,000 gpm from Well 8A, the blended water Cr-VI level is expected to be 7.7 ppb.

10-YEAR INFRASTRUCTURE PLAN

Based on the above discussion and treatment analyses, the 10-year infrastructure plan was developed. The priortization was performed based on cost and non-cost factors associated with each site. Table ES9 presents the proposed 10-year infrastructure plan and priority ranking.

Table ES9: 10-Year Infrastructure Plan

Priority Ranking	Project to be Performed during 2013 to 2023	Increase in Production Capacity, gpm	CIP Funds Required	Annual O&M Costs	Unit Capital Cost, $/gpd Increase in Water Capacity	Unit O&M Cost, $/1,000 gallon Total Water Produced
1	Garden Lakes and Gateway Nitrate Treatment Facilities Process Optimizations	0	$ 100,000	See Note 1.		
2	Expansion of Nitrate and DBCP Treatment Facilities at Gateway	1,000	$3,549,500	$349,700	$2.46	$3.33
3	CBS Nitrate Treatment Facility	4,250	$3,608,400	$282,900	$0.59	$0.63
4	DBS, Iron, Nitrate, and TDS Treatment Facility	1,900	$6,482,000	$459,000	$2.55	$1.77
5	Well 14 Arsenic Treatment Facility	450	$ 802,100	$ 44,200	$1.24	$0.72
		TOTAL	**$14,542,000**			

1. The annual O&M costs to be determined based on ongoing process optimization studies.

Other potential CIP projects include pilot testing of RO, EDR, and land application at DBS, an evaporation pond for the proposed NTF at CBS (a long term solution for spent brine disposal), and Cr-VI treatment facilities at Wells 14 and 24 (to address a potential future Cr-VI regulation). Table ES10 presents the additional potential CIP projects and associated costs.

Table ES10 : Additional Potential CIP Projects (2014-2023)

Description	CIP Funds May Be Required
RO, EDR, and Land Application Pilot Testing	$500,000
Evaporation Pond for CBS Nitrate Treatment Facility	$500,000
Well 14 Cr-VI Treatment Facility	$2,435,5000
Well 24 Cr-VI Treatment Facility	$2,435,5000
TOTAL	**$5,371,000**

CITY OF AVONDALE
WELLHEAD TREATMENT STUDY

FINAL REPORT

CHAPTER 1 - INTRODUCTION

TABLE OF CONTENTS

1.0 INTRODUCTION 1-1

1.1 SUMMARY OF TASKS PERFORMED 1-1

1.2 BASIS FOR CAPITAL COST 1-2

LIST OF TABLES

Table 1.1 Wells and EPDS included in the Study 1-1

CITY OF AVONDALE
WELLHEAD TREATMENT STUDY

FINAL REPORT

CHAPTER 1 - INTRODUCTION

1.0 INTRODUCTION

The City of Avondale (City) owns and operates public water system (PWS) # AZ0407088 to serve a population of approximately 76,000. At present, the City uses 100% recovered water, obtained from the West Salt River Valley Sub-Basin, to supply potable water to its customers. Salt River Project (SRP) surface water (CAP + reclaimed water) is used to recharge the aquifer at multiple sites. Some of the City's wells have water quality issues related to arsenic, nitrates, hexavalent chromium (possible future issue), total dissolved solids (TDS), and iron. Due to varying levels of contaminants in the wells, the City conducted this comprehensive Wellhead Treatment Study so the City can determine how to meet its customer's needs while complying with all current and anticipated drinking water regulations.

Appendix A includes a map of the City's water system.

1.1 SUMMARY OF TASKS PERFORMED

For this study, the following tasks were performed:

Regulatory Summary Review - A summary of the applicable State and Federal drinking water rules was developed. Both current and anticipated groundwater regulations are discussed along with the respective maximum contaminant levels (MCLs).

Water Quality Data Review of Impacted Wells - Under this task, the water quality data for selected wells and entry points to the distribution system (EPDS) was reviewed. Refer to Table 1.1 for wells and EPDS included in this study. This task identified potential water quality issues associated with each of the wells and EPDS. It also identified data gaps and recommended future monitoring. For hexavalent chromium (Cr-VI), all the wells within the water system were reviewed. For 1,2-dibromo-3-chloropropane (DBCP), Wells 8A, 24, 17, and 23 were reviewed.

Table 1.1 : Wells and EPDS included in the Study

EPDS #	EPDS Name	Existing Wells	Future Wells
5	Coldwater Booster Station	15, 16, 25	16b, 22, 26, Pecan Groves Replacement Well
7	Gateway Water Production Facility	8A, 24	
8	Garden Lakes Water Production Facility	17	
9	Del Rio Booster Station	21, 28	
Not Assigned	Not Assigned		14

Treatment Options for Hexavalent Chromium - This task identified the potential MCL for Cr-VI. Various treatment technologies available for Cr-VI removal along with design criteria, cost, and non cost information were developed. The most viable technology based on cost and non cost factors was recommended.

Treatment Options for Total Dissolved Solids - Under this task, various treatment technologies available for TDS reduction were identified. This task also identified treatment technologies which could be utilized for brine reduction and disposal. Both cost and non cost factors were considered for TDS and brine reduction technologies, and based on these factors, the most viable treatment technologies were recommended. This task also included the conduction of a survey of surrounding communities regarding their approach to addressing high TDS issues and brine disposal.

Treatment Options for Coldwater Booster Station (EPDS # 5) - This task included water quality issues and treatment solutions associated with the Coldwater Booster Station (CBS). Both cost and non cost factors were considered to select the most viable treatment option. Initially, Well 14 was assumed to be part of the CBS, however, due to the elevated arsenic levels at Well 14 and its relatively long distance from the CBS, it was decided to recommend a separate wellhead treatment unit for Well 14. CBS wells have nitrate concerns and blending Well 14 at CBS would elevate arsenic levels of the entire supply and pose additional treatment challenges.

Gateway Water Production Facility (EPDS # 7) Assessment - This task evaluated the existing nitrate treatment facility (NTF) and granular activated carbon (GAC) system at the Gateway Water Production Facility (GWPF). Various issues associated with the GWPF site including elevated nitrate levels, expansion of treatment facilities, and potential Cr-VI impacts for Well 24 were identified and evaluated. Solutions to alleviate these issues were identified.

Garden Lakes Water Production Facility (EPDS # 8) Assessment - This task evaluated the existing NTF at the Garden Lakes Water Production Facility (GLWPF). Various issues associated with the existing NTF including hazardous spent brine, elevated nitrate levels, and excess waste issues were identified and evaluated. Solutions to alleviate these issues were identified.

Treatment Options for Del Rio Booster Station (EPDS # 9) - This task identified water quality issues associated with the Del Rio Booster Station (DBS). Treatment technologies which could be utilized to address the water quality issues were evaluated. Both cost and non cost factors were considered for the selection of the most viable treatment alternative.

1.2 BASIS FOR CAPITAL COST

For this study, capital costs were developed based on recent projects with similar components, manufacturer's budget estimates, existing studies, standard construction cost estimating manuals (MEANS), and engineering judgement. The level of accuracy for the cost estimates corresponds to the Class 4 estimate as defined by the Association for the Advancement of Cost Engineering (AACE) International. This level of engineering cost estimation is approximate and generally made without detailed engineering data, but is appropriate for preliminary budget-level estimation. All the cost estimates in this study are based on year 2013.

CITY OF AVONDALE
WELLHEAD TREATMENT STUDY

FINAL REPORT

CHAPTER 2 - DRINKING WATER REGULATORY REQUIREMENTS

TABLE OF CONTENTS

2.0 INTRODUCTION 2-1

2.1 RULES THAT APPLY TO GROUND AND SURFACE WATER SYSTEMS 2-1
- 2.1.1 Primary Maximum Contaminant Levels 2-1
- 2.1.2 Secondary Maximum Contaminant Levels 2-3
- 2.1.3 Unregulated Contaminant Monitoring Rule 2-4
  - 2.1.3.1 UCMR 1 2-4
  - 2.1.3.2 UCMR 2 2-5
  - 2.1.3.3 UCMR 3 2-6
- 2.1.4 Total Coliform Rule 2-7
- 2.1.5 Lead and Copper Rule 2-8
- 2.1.6 Arsenic Rule 2-9
- 2.1.7 Stage 1 Disinfectants/Disinfection By-Product Rule 2-9
- 2.1.8 Stage 2 Disinfectants/Disinfection By-Product Rule (Stage 2 D/DBPR) 2-11
- 2.1.9 Groundwater Rule (GWR) 2-12
- 2.1.10 Radon Rule 2-13

2.2 EMERGING CONTAMINANTS 2-14
- 2.2.1 Contaminant Candidate List 2-14
- 2.2.2 Endocrine Disrupting Compounds, Pharmaceuticals, and Personal Care Products 2-14
- 2.2.3 Chromium-VI 2-15
- 2.2.4 Fluoride 2-15

CITY OF AVONDALE
WELLHEAD TREATMENT STUDY

FINAL REPORT

CHAPTER 2 - DRINKING WATER REGULATORY REQUIREMENTS

LIST OF TABLES

Table 2.1 National Primary Drinking Water Standards 2-2

Table 2.2 Secondary MCLs 2-4

Table 2.3 Stage 1 D/DBP Rule Requirements 2-10

Table 2.4 Required TOC Removal Rates for Systems Using Conventional Treatment 2-11

Table 2.5 Schedule for Stage 2 D/DBP Rule 2-12

CITY OF AVONDALE
WELLHEAD TREATMENT STUDY

FINAL REPORT

CHAPTER 2 - DRINKING WATER REGULATORY REQUIREMENTS

2.0 INTRODUCTION

This chapter provides a summary of the applicable Arizona State and Federal drinking water rules. Both current and anticipated groundwater regulations are discussed along with the respective maximum contaminant levels (MCLs). It is important to note that the State of Arizona has adopted Federal drinking water rules (Title 40 - Code of Federal Regulations, Part 141) by reference. Therefore, separate State drinking water rules do not exist.

In 1974, Congress passed the Safe Drinking Water Act (SDWA), which requires the United States Environmental Protection Agency (USEPA) to establish regulations on limiting contaminants that may be present in public water supplies and represent potential health risks. The SDWA was amended by Congress in 1986 and again in 1996. The USEPA sets legal limits for contaminants based on public health protection and the ability of utilities to meet the standards using the best available technology. In addition, USEPA Rules specify water testing schedules and procedures, and list acceptable technologies for treating contaminated water. The SDWA allows States (with primacy) to set and enforce their own regulations, providing they are at least as stringent as those set by USEPA.

2.1 RULES THAT APPLY TO GROUND AND SURFACE WATER SYSTEMS

2.1.1 Primary Maximum Contaminant Levels

The 1986 Amendments replaced the original National Interim Drinking Water Regulations with the National Primary Drinking Water Regulations (NPDWRs) and required implementation of Best Available Technologies (BATs) for regulated contaminants. For each contaminant, the USEPA sets a public health goal which is quantified as a Maximum Contaminant Level Goal (MCLG). At this level, a person could drink two liters of water containing the contaminant every day for 70 years without incurring any unacceptable health effects due to the regulated contaminant. While public water systems (PWS) are not legally obliged to meet MCLGs, they are obliged to meet the Maximum Contaminant Levels, which are set as close to MCLGs as is practical based on technical and financial considerations. The States or primacy agencies can either adopt Federal MCLs, or develop their own regulatory limits, which are more stringent than the Federal MCLs. Table 2.1 below presents Federal primary MCLs applicable to each EPDS. Distribution system MCLs are discussed subsequently.

Table 2.1: National Primary Drinking Water Standards

Contaminant	Federal MCL, mg/L
1,1,1-Trichloroethane	0.2
1,1,2-Trichloroethane	0.005
1,1-Dichloroethylene	0.007
1,2,4 Trichlorobenzene	0.07
1,2-Dibromo-3-chloropropane (DBCP)	0.0002
1,2-Dichloroethane	0.005
1,2-Dichloropropane	0.005
2,3,7,8-TCDD (Dioxin)	3x10-8
2,4,5-TP (Silvex)	0.05
2,4-D	0.07
Acrylamide	Treatment Technique[1]
Alachlor	0.002
Antimony	0.006
Arsenic	0.01
Asbestos, million fibers per liter	7
Atrazine	0.003
Barium	2
Benzene	0.005
Benzo(a) Pyrene	0.0002
Beryllium	0.004
Cadmium	0.005
Carbofuran	0.04
Carbon Tetrachloride	0.005
Chlordane	0.002
Chlorobenzene	0.1
Total Chromium	0.1
cis-1,2-Dichloroethylene	0.07
Copper	Treatment Technique[2]
Combined radium-226 & 228, pCi/L	5
Cyanide	0.2
Dalapon	0.2
Di(2-ethylhexyl)adipate	0.4
Di(2-ethylhexyl)phthalate	0.006
Dichloromethane	0.005
Dinoseb	0.007
Diquat	0.02
Endothall	0.1
Endrin	0.002
Epichlorohydrin	Treatment Technique[1]
Ethylbenzene	0.7
Ethylene Dibromide	0.00005
Fluoride	4
Glyphosate	0.7
Gross Alpha particle activity, pCi/L	15

Contaminant	Federal MCL, mg/L
Gross Beta particle activity, mrem/year	4
Heptachlor	0.0004
Heptachlor Epoxide	0.0002
Hexachlorobenzene	0.001
Hexachlorocyclopentadiene	0.05
Lead	Treatment Technique[2]
Lindane	0.0002
Mercury	0.002
Methoxychlor	0.04
Nitrate (as N)	10
Nitrite (as N)	1
o-Dichlorobenzene	0.6
Oxamyl	0.2
p-Dichlorobenzene	0.075
Pentachlorophenol	0.001
Picloram	0.5
Polychlorinated Biphenyls	0.0005
Selenium	0.05
Simazine	0.004
Styrene	0.1
Tetrachloroethylene	0.005
Thallium	0.002
Toluene	1
Toxaphene	0.003
trans-1,2-Dichloroethylene	0.1
Trichloroethylene	0.005
Uranium	0.03
Vinyl chloride	0.002
Xylenes	10

Notes:

1. Each water system must certify, in writing, to the state (using third-party or manufacturer's certification) that when acrylamide and epichlorohydrin are used to treat water, the combination (or product) of dose and monomer level does not exceed the levels specified, as follows:
   Acrylamide = 0.05% dosed at 1 mg/L (or equivalent)
   Epichlorohydrin = 0.01% dosed at 20 mg/L (or equivalent)
2. Lead and copper are regulated by a treatment technique that requires systems to control the corrosiveness of their water. If more than 10% of tap water samples exceed the action level, water systems must take additional steps. For copper, the action level is 1.3 mg/L, and for lead is 0.015 mg/L.

2.1.2 Secondary Maximum Contaminant Levels

Secondary Maximum Contaminant Levels (SMCL) were enacted to provide guidelines for contaminants that may affect the appearance or taste/odor of water, but do not have adverse health effects. SMCLs are non-enforceable under Federal guidelines, however, most PWSs tend to meet them to avoid customer complaints. The USEPA recommends that monitoring for secondary contaminants be performed at intervals no less frequent than those for inorganic chemicals applicable

to community PWSs (e.g., three years for groundwater systems). A summary of secondary MCLs is shown in Table 2.2.

Table 2.2: Secondary MCLs

Contaminant	Federal SMCL, mg/L
Aluminum	0.05 - 2.0
Chloride	250
Color	15 (color unit)
Copper	1.0
Corrosivity	Non corrosive
Fluoride	2.0
Foaming Agents	0.5
Iron	0.3
Manganese	0.05
Odor	3 threshold odor limit
pH	6.5 – 8.5
Silver	0.1
Sulfate	250
Total Dissolved Solids	500
Zinc	5

2.1.3 Unregulated Contaminant Monitoring Rule

The first unregulated contaminant monitoring rule (UCMR) was published in the Federal Register in September 1999. The second (UCMR 2) was published on January 4, 2007, and the third (UCMR 3) was published on May 2, 2012. The unregulated contaminants do not have MCLs, but all large PWSs serving more than 10,000 persons must monitor these contaminants (semi-annually for groundwater) to maintain their compliance status. USEPA uses this list of unregulated contaminants to prioritize research and data collection efforts to help USEPA determine whether or not they should regulate a specific contaminant.

2.1.3.1 UCMR 1

The UCMR 1 contaminants are classified into three separate lists - an Assessment Monitoring (UCMR 1 - List 1), a Screening Survey (UCMR 1 - List 2), and a Pre-screening Test (UCMR 1 - List 3). Monitoring for these contaminants began in January 1, 2001.

<u>Assessment Monitoring (UCMR 1 - List 1)</u>

1. 2,4-Dinitrotoluene
2. 2,6-Dinitrotoluene
3. Acetochlor
4. DCPA mono-acid degradate
5. DCPA di-acid degradate
6. 4,4'-DDE
7. EPTC
8. Molinate

9. MTBE
10. Nitrobenzene
11. Perchlorate
12. Terbaccil

Screening Survey (UCMR 1 - List 2)
1. Diphenylhydrazine
2. 2-Methylphenol
3. 2,4-Dichlorophenol
4. 2,4-Dinitropheno
5. 2,4,6-Ttrichlorophenol
6. Diazinon
7. Disulfoton
8. Diuron
9. Fonofos
10. Linuron
11. Nitrobenzene
12. Prometon
13. Terbufos
14. Aeromonas
15. Alachlor ESA
16. RDX

Pre-screening Test (UCMR 1 - List 3)
1. Lead-210
2. Polonium-210
3. Cyanobacteria
4. Echoviruses
5. Coxsackieviruses
6. Helicobacter pylori
7. Microsporidia
8. Caliciviruses
9. Adenoviruses

2.1.3.2 UCMR 2

As part of UCMR 2, USEPA required PWSs serving more than 10,000 people, and a representative sample of 800 PWSs serving 10,000 or fewer people to monitor for 25 chemicals using five different analytical methods. All PWSs were required to conduct Assessment Monitoring (UCMR 2 - List 1) for 10 chemicals during a 12-month period during January 2008 - December 2010. All PWSs serving more than 100,000 people, 320 selected PWSs serving 10,001 to 100,000 people, and 480 selected PWSs serving 10,000 or fewer people were required to conduct the Screening Survey (UCMR 2 - List 2) for 15 contaminants during a 12-month period during January 2008 - December 2010.

Assessment Monitoring (UCMR 2 - List 1)
1. 1,3-dinitrobenzene

2. 2,2',4,4',5,5'-hexabromobiphenyl (HBB)
3. 2,2',4,4',5,5'-hexabromodiphenyl ether (BDE-153)
4. 2,2',4,4',5-pentabromodiphenyl ether (BDE-99)
5. 2,2',4,4',6-pentabromodiphenyl ether (BDE-100)
6. 2,2',4,4'-tetrabromodiphenyl ether (BDE-47)
7. 2,4,6-trinitrotoluene (TNT)
8. Dimethoate
9. Hexahydro-1,3,5-trinitro-1,3,5-triazine (RDX)
10. Terbufos sulfone

Screening Survey (UCMR 2 - List 2)

1. Acetochlor
2. Acetochlor ethane sulfonic acid
3. Acetochlor oxanilic acid
4. Alachlor
5. Alachlor ethane sulfonic acid
6. Alachlor oxanilic acid
7. Metolachlor
8. Metolachlor ethane sulfonic acid (ESA)
9. Metolachlor oxanilic acid (OA)
10. N-nitroso-diethylamine (NDEA)
11. N-nitroso-dimethylamine (NDMA)
12. N-nitroso-di-n-butylamine (NDBA)
13. N-nitroso-di-n-propylamine (NDPA)
14. N-nitroso-methylethylamine (NMEA)
15. N-nitroso-pyrrolidine (NPYR)

2.1.3.3 UCMR 3

The UCMR 3 divides contaminants into three types of monitoring. For UCMR 3, all PWSs serving more than 10,000 people and 800 representative PWSs serving 10,000 or fewer people will monitor for UCMR 3 - List 1 contaminants during a 12-month period from January 2013 through December 2015.

Assessment Monitoring (UCMR 3 - List 1)

1. 1,1-dichloroethane
2. 1,2,3-trichloropropane
3. 1,3-butadiene
4. 1,4-dioxane
5. Bromochloromethane (halon 1011)
6. Bromomethane (methyl bromide)
7. Chlorate
8. Chlorodifluoromethane (HCFC-22)
9. Chloromethane (methyl chloride)
10. Chromium-III (Cr-III)
11. Chromium-VI (Cr-VI)
12. Cobalt

13. Molybdenum
14. Perfluorobutanesulfonic acid (PFBS)
15. Perfluoroheptanoic acid (PFHpA)
16. Perfluorohexanesulfonic acid (PFHxS)
17. Perfluorononanoic acid (PFNA)
18. Perfluorooctanesulfonic acid (PFOS)
19. Perfluorooctanoic acid (PFOA)
20. Strontium
21. Vanadium

All PWSs serving more than 100,000 people, 320 representative PWSs serving 10,001 to100,000 people, and 480 representative PWSs serving 10,000 or fewer people are required to monitor for UCMR 3 - List 2 contaminants during a 12-month period from January 2013 through December 2015.

Screening Survey (UCMR 3 - List 2)
1. 16-β-Fydroxyestradiol (estriol)
2. 17-α-Estradiol
3. 17-α--Ethynylestradiol (ethinyl estradiol)
4. 4-Androstene-3,17-dione
5. Equilin
6. Estrone
7. Testosterone

For UCMR 3, pre-screen testing will be conducted on 800 representative PWSs serving 1,000 or fewer people that do not disinfect. These PWSs with wells that are located in areas of karst or fractured bedrock, will participate in monitoring for UCMR 3 - List 3 viruses during a 12-month period from January 2013 through December 2015.

Pre-Screen Testing (UCMR 3 - List 3)
1. Enteroviruses
2. Noroviruses

2.1.4 Total Coliform Rule

The Total Coliform Rule (TCR) was enacted on June 29, 1989. Total coliforms are a broad group of bacteria and include both fecal coliforms and E. coli. The MCLG for total coliforms is set at zero. Compliance with the MCL is based on the presence or absence of total coliforms in a sample. The MCL for systems testing at least forty samples per month shall be no more than five percent of the monthly samples exhibiting a positive total coliform count. For systems testing fewer than forty samples per month, no more than one sample per month may test positive for total coliforms. If a sample is found to have a positive result for total coliforms, a set of three or four repeat samples must be tested for total coliforms. At least one of the repeat samples must be from the original tap where the positive sample was taken. Requirements for monthly monitoring are based on the population served.

On February 13, 2013, USEPA finalized revisions to the 1989 TCR. USEPA anticipates greater

public health protection under the Revised Total Coliform Rule (RTCR) requirements. As part of the RTCR:

1. PWSs which are vulnerable to microbial contamination are required to identify and fix problems; and
2. Establishes criteria for systems to qualify for and stay on reduced monitoring, which could reduce water system burden and provide incentives for better system operation.

The final RTCR establishes an MCLG and an MCL for E. coli and eliminates the MCLG and MCL for total coliforms. The RTCR requires systems that have an indication of coliform contamination in the distribution system to assess the problem and take corrective action that may reduce cases of illnesses and deaths due to potential fecal contamination and waterborne pathogen exposure. PWSs will continue to monitor for total coliform and E. Coli as per TCR monitoring plans. Under the RTCR, PWSs are required to correct sanitary defects found through either a Level 1 or Level 2 assessment. Systems should ideally be able to correct any sanitary defects found in the assessment within 30 days, especially when E. coli has been detected and report that correction on the assessment form.

2.1.5 Lead and Copper Rule

The Lead and Copper Rule (LCR) was enacted in June 1991 and became effective in December 1992. The rule requires monitoring of lead and copper at consumers' taps every six months. Water samples at the customers' taps are required to be taken at high-risk locations, which are defined as homes with lead solder installed after 1982, lead service lines, and/or lead interior piping. The number of monitoring samples depend on the population served by a PWS. Compliance with the rule is based on the following action levels:

- Lead – 0.015 mg/L computed as the 90th percentile levels of all samples collected.
- Copper – 1.3 mg/L computed as the 90th percentile levels of all samples collected.

If the action levels are exceeded for either lead or copper, the water system is required to collect source water samples and submit the data with a treatment recommendation to the State. In addition, if the lead action level is exceeded, the water system is required to develop and conduct a public education program for its customers within 60 days of learning the results. The public education program must be continued as long as the water system exceeds the action levels. All large water systems as well as small and medium sized water systems that exceed the lead or copper action level are required to conduct corrosion control studies. Corrosion control studies must compare the effectiveness of pH and alkalinity adjustment, calcium adjustment, and addition of a phosphate or silica-based corrosion inhibitor. In addition to lead and copper, large and medium sized systems that exceed the lead or copper action level are required to monitor other water quality parameters.

After performing a corrosion control study, the water system has to develop a corrosion control treatment plan on the basis of study results and monitoring data and submit this plan to the appropriate regulatory agency for approval. Once the treatment plan is approved by the State, the PWS will have twenty-four months to install the optimal corrosion control treatment and twelve months to collect follow-up samples. Once corrosion control is proven effective by monitoring, the regulatory agency will assign values for water quality parameters that will be used to ensure that

corrosion treatment is being implemented. For example, utilities that choose to use orthophosphate for corrosion control would be required to monitor for phosphates.

Revisions to the rule were promulgated in January 2000, and became effective in April 2000. The revisions included clarification of rules with respect to optimal corrosion control demonstration, changes to the public education requirements, updated analytical methods for lead and copper, changes in monitoring requirements, and additional special primacy considerations for the determination of optimal compliance when multiple samples are collected daily. In 2004, USEPA revised the rule to clarify monitoring requirements. In 2007, USEPA further clarified sample collection requirements for very small systems to consider the following:

- Compliance monitoring period definition.
- Reduced monitoring requirements.
- Advance notice requirements to the primacy agency with respect to changes in source of water or major water treatment changes.
- Public education requirements.
- Requirements for PWSs who have decided to reinitiate lead service line replacement.

USEPA is also looking at long term revisions to the LCR based on recently held stakeholder meetings.

2.1.6 Arsenic Rule

The Arsenic Rule was issued on January 22, 2001 with an effective date of January 23, 2006. The rule reduced the arsenic MCL from 50 to 10 parts per billion (ppb), and included an MCLG of zero. In March 2003, the USEPA published a rule clarification relating to rounding of the arsenic concentration. All PWSs are required to monitor for arsenic at each entry point into the distribution system. Groundwater systems were required to collect initial samples by December 31, 2007. Systems whose initial sample is below the MCL can reduce monitoring frequency to once a year for surface water systems and once every 3 years for groundwater systems. For any system that exceeds the MCL, quarterly samples must be taken at that point until the concentration is consistently below the MCL.

2.1.7 Stage 1 Disinfectants/Disinfection By-Product Rule

The Stage 1 Disinfectants/Disinfection By-Product (D/DBP) Rule was proposed along with the Interim Enhanced Surface Water Treatment Rule (IESWTR) and became effective on January 2002 for large systems (serving 10,000 or more people) with either surface water sources or groundwater under the influence of surface water. Smaller systems (serving less than 10,000 people) irrespective of their source water, had to comply with the Rule by January 2004. The Stage 1 D/DBP Rule applies to all community and non-transient non-community water systems that treat their water with a chemical disinfectant for either primary or residual treatment. This rule updated and superceded the 1979 regulation that regulated total trihalomethanes (TTHMs), a group of the chlorinated byproducts of concern in drinking water treatment. The rule also set MCLGs, MCLs, maximum residual disinfectant level goals (MRDLGs), maximum residual disinfectant levels (MRDLs), and treatment technique requirements for removal of DBP precursors (measured as total organic carbon) in conventional surface WTPs. The key requirements of Stage 1 D/DBPR are shown in Table 2.3.

Table 2.3: Stage 1 D/DBP Rule Requirements

Disinfectant Residual	**MRDLG (Goal) mg/L**	**MRDL mg/L**	**Compliance criteria (3)**
- Chlorine	4 (as Cl_2)	4.0 (as Cl_2)	RAA
- Chloramine	4 (as Cl_2)	4.0 (as Cl_2)	RAA
- Chlorine Dioxide	0.8 (as ClO_2)	0.8 (as ClO_2)	Daily Monitoring at all EPDS
Disinfection Byproducts	**MCLG (mg/L)**	**MCL (mg/L)**	**Compliance[3] based on**
Total Trihalomethanes (TTHM)[1]		Sum of 4: 0.080	RAA
- Chloroform	0.07		
- Bromodichloromethane	0		
- Dibromochloromethane	0.06		
- Bromoform	0		
Haloacetic Acids (five) (HAA5)[2]		Sum of 5: 0.060	RAA
- Dichloroacetic Acid	0		
- Trichloroacetic Acid	0.3		
- Chlorite	0.8	1.0	Monthly
- Bromate	0	0.010	RAA

Notes:
1. Total trihalomethanes is the sum of the concentrations of chloroform, bromodichloromethane, dibromochloromethane, and bromoform.
2. Haloacetic acids (five) is the sum of the concentrations of mono-, di-, and trichloroacetic acids and mono- and dibromoacetic acids.
3. Based on the regular monitoring, the requirements may be changed.
RAA – Running Annual Average

For surface water systems, the Stage 1 D/DBP rule also established minimum requirements for systems to remove naturally occurring organic precursors in water sources which upon disinfection contribute to the formation of the DBPs. These standards, called the Enhanced Coagulation guidelines, required that all water systems that use surface water or groundwater under the direct influence of a surface water and use conventional treatment (coagulation/sedimentation/filtration), must remove specified percentages of total organic carbon (TOC) summarized in Table 2.4.

Table 2.4: Required TOC Removal Rates for Systems Using Conventional Treatment

Source Water TOC (mg/L)	Source Water Alkalinity (mg/L as $CaCO_3$)		
	0 - 60	>60 - 120	> 120[1]
>2.0 – 4.0	35%	25%	15%
>4.0 – 8.0	45%	35%	25%
>8.0	50%	40%	30%

Notes:
1. Systems practicing softening must meet the TOC removals in the last column to the right.

Compliance is calculated on an annual running average of monthly samples computed quarterly. Removal must be achieved through improvements to the treatment train unless the system meets an alternative criteria. A PWS system can meet the enhanced coagulation requirements if any of the alternative criteria applies. The alternative criteria include annual average raw or treated water TOC <2.0 mg/L, annual average finished water THM/HAA levels below 40/30 ppb, raw or treated water Specific UV absorbance (SUVA) <2.0 L/mg-m, or softening to achieve treated water alkalinity <60 mg/L. A PWS also meets an alternative criteria if an incremental TOC removal rate of less than or equal to 0.3 mg TOC/L per 10 mg/L alum is achieved. The corresponding alternative criteria for ferric chloride coagulant is an incremental TOC removal rate of less than or equal to 0.55 mg/L per 10 mg/L ferric chloride added.

2.1.8 Stage 2 Disinfectants/Disinfection By-Product Rule (Stage 2 D/DBPR)

The Stage 2 D/DBP Rule was proposed on August 18, 2003 and was finalized in December 2005. The intent of the Stage 2 D/DBP rule was to ensure that customers in all locations of the distribution system receive water that complies with DBP standards of 80 ppb for THMs and 60 ppb for HAAs. It is much more stringent than the Stage 1 Rule because each sample location in the system must comply with the standards based on the running annual average of respective contaminants.

All community water systems and non-community, non-transient systems serving more than 10,000 persons must develop new DBP compliance monitoring sites based on an Initial Distribution System Evaluation (IDSE). All public water systems which supply water that has been disinfected with a primary or residual disinfectant (other than UV) must conduct an IDSE. PWS that serve less than 500 persons or have THMs and HAA5 levels less than 40 and 30 ppb are not required to conduct an IDSE.

The USEPA developed an IDSE tool to assist PWSs in conducting IDSEs. There are two approaches to conducting an IDSE. The Standard Monitoring Program (SMP) is the default option and requires one year of monitoring based on population served by a PWS and source water type. The other option to conduct an IDSE is to conduct a System Specific Study (SSS) which consists of identifying equivalent or superior monitoring sites based on either using a calibrated extended simulation hydraulic model and one sampling event or historical DBP data. A PWS must conduct its IDSE based on a staggered plan based on population served (see Table 2.5).

Table 2.5. Schedule for Stage 2 D/DBP Rule

Public Water System Designation	Schedule Deadline			
	Submit IDSE monitoring plan, system specific study plan, or 40/30 certification	Complete an initial distribution system evaluation (IDSE)	Submit IDSE Report	Begin subpart V (Stage 2) compliance monitoring
CWSs and NTNCWSs serving at least 100,000	October 1, 2006	September 30, 2008	January 1, 2009	April 1, 2012
CWSs and NTNCWSs serving 50,000 - 99,999	April 1, 2007	March 31, 2009	July 1, 2009	October 1, 2012
CWSs and NTNCWSs serving 10,000 - 49,999	October 1, 2007	September 30, 2009	January 1, 2010	October 1, 2013
CWSs serving fewer than 10,000	April 1, 2008	March 31, 2010	July 1, 2010	October 1, 2013
NTNCWSs serving fewer than 10,000	NA	NA	NA	October 1, 2013

CWS: Community Water System
NTNCWS: Non Transient Non Community Water Systems

Compliance with the Stage 2 D/DBP Rule will be based on Locational Running Annual Average (LRAA) DBP concentrations. A PWS can receive two additional years to comply with the rule if capital improvements are required to meet DBP MCLs. Based on the above table, the Stage 2 D/DBP compliance date for the City of Avondale was October 1, 2012.

The Stage 2 DBP rule also requires each system to determine if they have exceeded an operational evaluation level, which is identified using their compliance monitoring results. The operational evaluation level provides an early warning of possible future MCL violations, which allows the system to take proactive steps to remain in compliance. A system that exceeds an operational evaluation level is required to review their operational practices and submit a report to their State that identifies actions that may be taken to mitigate future high DBP levels, particularly those that may jeopardize their compliance with the DBP MCLs.

2.1.9 Groundwater Rule (GWR)

The Groundwater Rule was proposed on May 10, 2000 and finalized on November 8, 2006. The requirements of the GWR are summarized below:

- States must complete the initial survey by December 31, 2012 for most community water systems (CWSs), and by December 31, 2014 for CWSs with outstanding performance and all non-community water systems. States must notify water systems within 30 days of any deficiencies.

- Triggered source water monitoring is required for a system that does not provide disinfection equivalent to 4-logs of virus removal and identifies a positive sample during its Total Coliform Rule monitoring and assessment monitoring (at the option of the State) targeted at high-risk systems.
- Corrective action is required for any system with a significant deficiency or source water fecal contamination.
- Compliance monitoring to ensure that treatment technology installed to treat drinking water reliably achieves 99.99 percent (4-log) inactivation or removal of viruses.

The compliance date for triggered monitoring (and associated corrective actions) and compliance monitoring was December 1, 2009.

2.1.10 Radon Rule

The Radon Rule was proposed on November 2, 1999 and its future is very much uncertain and likely will not be promulgated anytime soon. The proposed Radon Rule regulates radon in drinking water, but it also allows water systems the option of alternative compliance by addressing radon in indoor air. Radon in indoor air poses a greater risk to human health than radon in drinking water. The proposed Radon Rule has three primary components:

- Radon Monitoring – Water systems will be required to conduct an initial quarterly, 1-year, radon monitoring program at each distribution system point of entry (POE). The results of the initial monitoring will be used to determine if a water system continues with the routine, reduced, or increased monitoring program. Initial monitoring may be waived based upon previous radon monitoring results, geological characteristics of the source aquifer, or analytical radon results that are consistently less than one-half of the MCL or alternative MCL.

- Radon MCL – A radon drinking water MCL of 300 pCi/L is proposed. Compliance with the MCL will be measured at all distribution system POEs. Based on public comment, a higher MCL around 1,000 pCi/L will likely be included in a potential final rule.

- Radon Alternative MCL – An alternative MCL of 4,000 pCi/L for radon in drinking water will be established. The alternative MCL applies to water systems in states or communities that have established a Multimedia Mitigation (MMM) Program to address health risks from radon in indoor air. The MMM Programs will be required to meet four criteria:
  - ✓ Public involvement in the program.
  - ✓ Quantitative goals for existing remediated homes and radon-impervious construction for new homes.
  - ✓ Strategies for achieving goals.
  - ✓ Plans to track and report results.

Based on public feedback and logistics of a MMM program, it is highly unlikely that a MMM program will be included in any potential final rule.

2.2 EMERGING CONTAMINANTS

2.2.1 Contaminant Candidate List

To prioritize regulations for future contaminants, the USEPA developed the Contaminant Candidate List (CCL) under the authority of the Safe Drinking Water Act. The CCL serves as the primary source of priority contaminants for drinking water research, occurrence monitoring, and guidance development. In March 1998, the USEPA published the first CCL consisting of 60 contaminants. In February 2005, the USEPA published the second CCL which consisted of 51 of the original 60 contaminants. The final CCL 3 was published in October 2009 and includes 104 chemicals or chemical groups and 12 microbiological contaminants. On May 8, 2012, USEPA published in the Federal Register nominations for potential candidates for CCL 4.

2.2.2 Endocrine Disrupting Compounds, Pharmaceuticals, and Personal Care Products

Endocrine disruptors, pharmaceuticals and personal care products are chemicals that interfere with the normal function of the endocrine system consisting of a number of ductless glands in the human body. The 1996 Safe Drinking Water Act Amendments and the Food Quality Protection Act require the USEPA to develop a screening and testing program to determine which chemical substances have possible endocrine disrupting effects on humans. The Endocrine Disruptor Screening and Testing Advisory Committee (EDSTAC) defines endocrine disruptors as exogenous chemical substances, or mixtures, that alter the structure or function(s) of the endocrine system and causes adverse effects at the level of the organism, its progeny, populations, or subpopulations of organisms, based on scientific principles, data, weight-of-evidence, and the precautionary principle. The USEPA's EDSTAC estimated that there are approximately 87,000 chemicals that should be screened for their endocrine disrupting activity. Approximately 25,000 are polymers with large molecular weight making them incapable of penetrating the biologic membranes; resulting in approximately 62,000 chemicals to be screened. These compounds may include organohalides (chloroform, PCBs, dioxins, etc.), food antioxidants (BHA), pesticides (atrazine, chlordane, DDT and its metabolites), herbicides and insecticides (lindane), phthalates and plasticizers (bisphenol A), synthetic hormones and hormone blockers, natural hormones (phytoestrogens), surfactants, fire retardant chemicals, antibiotics, antacids, analgesics, and other pharmaceuticals, and metals (arsenic, mercury and lead). A number of these contaminants are already regulated in drinking water.

The sources for endocrine disrupting chemicals in drinking water may include wastewater treatment plant effluents, land application of sludges, surface runoffs, industrial discharges, disposal in landfills, animal feeding operations, and intentional discharges. Generally, conventional water treatment processes are ineffective for control of these contaminants. Depending on the contaminant characteristics, the applicable treatment technologies may include powdered and granular activated carbon adsorption, aquifer recharge, chlorination, ozone and advanced oxidation processes, UV irradiation, biologically enhanced water treatment, bank filtration, and high pressure membranes.

A study by the Toxic Substances Hydrology Program of the U.S. Geological Survey (USGS) showed that a broad range of chemicals were found in residential, industrial and agricultural wastewaters. The chemicals included human and veterinary drugs (including antibiotics), natural and synthetic hormones, detergent metabolites, plasticizers, insecticides, and fire retardants. One or more of these chemicals were found in 80 percent of the surveyed streams (139 streams in 30 States). Half of the streams contained seven or more of these chemicals, and about one-third of the streams contained

10 or more of these chemicals. These observations indicate that occurrence of these chemicals is widespread, and a large number of these contaminants may be regulated in the future.

2.2.3 Chromium-VI

The current USEPA standard for total chromium (Cr-III and Cr-VI) is 100 ppb. Of the two chromium species, Cr-VI (hexavalent chromium) has adverse health effects and may be carcinogenic. In September 2010, USEPA released a draft of the scientific human health assessment (Toxicological Review of Hexavalent Chromium) for public comment and external peer review. USEPA will review the conclusions from the peer review and comments, and assess if a new standard for Cr-VI is warranted. On January 11, 2011, USEPA issued guidance via a press statement to PWSs to enhance monitoring for Cr-VI in their water. The enhanced monitoring guidance provides recommendations on the location and frequency of sample collection, and the analysis of the samples. A specific time for USEPA regulation of Cr-VI is not available. The California Department of Public Health (CDPH) has a total chromium MCL of 50 ppb which was established in 1977. CDPH is required by California law to set an MCL for Cr-VI and to set the MCL as close to the public health goal (PHG) as possible, taking into account technical feasibility (e.g., delectability and treatment) and costs. The California Office of Environmental Health Hazard Assessment set a PHG of 0.02 ppb for Cr-VI on July 27, 2011. On August 23, 2013, the CDPH proposed a MCL of 10 ppb for Cr-VI for public comment, and the primary MCL is anticipated to be established in 2014. Based on monitoring data collected from 2000 to 2012, 1,596 sources had peak Cr-VI levels between 1 to 5 ppb (detection rate of 66%) in California. A source is defined as an active, standby, and pending source reporting more than a single detection of Cr-VI, and data may include both raw and treated sources, distribution systems, blending reservoirs, and other sampled entities. Based on the analysis of the current regulatory climate and technical information, a potential Cr-VI standard (MCL) could be set anywhere between 5 - 20 ppb in the future by USEPA. For this study, NCS utilized a potential primary MCL of 10 ppb for Cr-VI. This planning level MCL of 10 ppb is appropriate as CDPH has proposed a MCL of 10 ppb for Cr-VI for public comment.

2.2.4 Fluoride

The current MCLG and MCL for fluoride is 4.0 mg/L. USEPA has also set a secondary standard (SMCL) for fluoride at 2.0 mg/L. Secondary standards are non-enforceable guidelines regulating contaminants that may cause cosmetic effects (such as skin or tooth discoloration) or aesthetic effects (such as taste, odor, or color) in drinking water. Fluoride may occur naturally in source water, or is added by a PWS to promote dental health. Exposure to excessive consumption of fluoride over a lifetime may lead to increased likelihood of bone fractures in adults, and may result in effects on bone leading to pain and tenderness. Children eight years and younger exposed to excessive amounts of fluoride have an increased chance of developing pits in the tooth enamel, along with a range of cosmetic effects to teeth.

Based on a National Research Council of the National Academies of Science report entitled "Fluoride in Drinking Water: A Scientific Review of USEPA's Standards", USEPA began an assessment of health and exposure assessments for fluoride in March 2010. In January 2011, USEPA announced its intent to review the drinking water regulations for fluoride to determine if revisions are required. The U.S. Department of Health and Human Services has proposed a recommendation of 0.7 milligrams of fluoride per liter of water to replace the current recommended

range of 0.7 to 1.2 mg/L; and USEPA is expected to use this information in making any future revisions to the fluoride MCL.

CITY OF AVONDALE
WELLHEAD TREATMENT STUDY

FINAL REPORT

CHAPTER 3 - WATER QUALITY REVIEW OF IMPACTED WELLS

TABLE OF CONTENTS

3.0 INTRODUCTION 3-1

3.1 WELL WATER QUALITY DATA REVIEW 3-1

3.2 EPDS WATER QUALITY DATA REVIEW 3-4

3.3 WELL UTILIZATION RATE 3-6

3.4 SUMMARY AND CONCLUSIONS 3-6

LIST OF TABLES

Table 3.1 Well Water Quality Data - Spring 2013 . . . . . After 3-1

Table 3.2 Chromium-VI Data - Spring 2013 . . . . . After 3-3

Table 3.3 EPDS Details 3-4

Table 3.4 2008 EPDS Water Quality Data . . . . . After 3-4

Table 3.5 2009 EPDS Water Quality Data . . . . . After 3-4

Table 3.6 2010 EPDS Water Quality Data . . . . . After 3-4

Table 3.7 2011 EPDS Water Quality Data . . . . . After 3-4

Table 3.8 2012 EPDS Water Quality Data . . . . . After 3-4

Table 3.9 Chromium-VI Data for EPDS . . . . . After 3-4

Table 3.10 Well Utilization Rate . . . . . After 3-6

Table 3.11 Wells and Contaminants of Concern 3-6

CITY OF AVONDALE
WELLHEAD TREATMENT STUDY

FINAL REPORT

CHAPTER 3 - WATER QUALITY REVIEW OF IMPACTED WELLS

3.0 INTRODUCTION

This chapter provides a water quality review summary for wells and all the EPDSs included in this study. Potential water quality issues associated with each well and EPDS are identified, along with data gaps and recommendations for future monitoring. The City's water system has seven EPDSs suppling water to the distribution system. Each EPDS includes one or more wells. Of the seven EPDSs, six are currently active, and one (Del Rio Booster Station) is inactive. Appendix A shows the City's water system map.

3.1 WELL WATER QUALITY DATA REVIEW

Table 3.1 summarizes water quality data for wells included in this study. In the absence of historical well water quality data, the City collected well water samples during February and March 2013 and analyzed for arsenic, nitrate, total chromium, chromium-VI (Cr-VI), sulfates, total dissolved solids (TDS), iron, manganese, pH, phosphorus, vanadium, alkalinity, hardness, silica, and 1,2-dibromo-3-chloropropane (DBCP). A discussion of water quality for each of the sites evaluated in this study is presented below.

Well 14 - This well produces 450 gallons per minute (gpm), however, this well has been inactive due to high arsenic, and is disconnected from distribution. The City was unable to sample this well and does not have historical water quality data for this well. The 2002 Well Registry Report was obtained for this well from the Arizona Department of Water Resources (ADWR) website. This report lists several water quality parameters submitted as part of the "New Source Approval". According to this report, the well had an arsenic level of 40 ppb which is considerably higher than the primary MCL of 10 ppb. The nitrate level of 1.6 mg/L is below the primary MCL of 10 mg/L. The TDS level of 320 mg/L is below the City's internal goal of 750 mg/L for potable water (refer to Chapter 4 for TDS goal). The total chromium level of 38 ppb is below the primary MCL of 100 ppb. The well water pH is 8.65. The DBCP level of < 0.01 ppb is below the primary MCL of 0.2 ppb.

Well 15 - This well discharges to the Coldwater Booster Station (CBS) at a flow rate of 625 gpm. According to the City, this well typically has elevated arsenic levels, although the Spring 2013 sample showed an arsenic level of 4.9 ppb which is below the primary MCL. The nitrate level is 8.9 mg/L which is marginally below the primary MCL. The total chromium level of 16 ppb is below the primary MCL. The well has elevated hardness with a total hardness level of 432 mg/L as $CaCO_3$ (when total hardness is > 150 mg/L, water is considered very hard). The TDS level of 724 mg/L is just below the City's internal goal of TDS. The iron and manganese levels are considerably below the secondary MCL of 0.30 mg/L for iron and 0.05 mg/L for manganese. The other water quality parameters do not appear to be an issue for this well.

Table 3.1 : Well Water Quality Data - Spring 2013

Parameter	Unit	Primary MCL	Secondary MCL	Well 14[vii]	Well 15[viii]	Well 16	Well 16b[viii]	Well 22[i]	Well 25	Well 26[vi]	Pecan Groves Replacement Well[iv]	Well 21	Well 28[ii]	Well 8A	Well 24	Well 17[iii]	Well 23[v]
				Not Assigned	CBS	CBS	CBS	CBS	CBS	CBS	CBS	DBS	DBS	Gateway	Gateway	Garden Lakes	
Flow Rate	gpm			450	650	2,200	650	1,200	1,200	1,200	1,200	1,200	900	3,000	750	1,200	NA
Arsenic	ppb	10		40	4.9	3.9	5.3	3.1	4.7	4.2	5.3	2.2	3	NA	NA	NA	NA
Nitrate as Nitrogen	mg/L	10		1.6	8.9	5.8	3.6	10.0	12.5	5.3	3.6	10.6	8.5	NA	NA	NA	NA
Chromium, Total	ppb	100		38	16	< 5	< 5	14	17	< 5	< 5	11	21	NA	NA	NA	NA
Sulfate	mg/L		250	45	97	85	88	110	117	86	88	172	206	NA	NA	NA	NA
TDS	mg/L		500	320	724	688	687	890	833	688	687	1530	1,560	NA	NA	NA	NA
Iron	mg/L		0.3	NA	< 0.05	< 0.05	< 0.05	0.31	0.31	< 0.05	< 0.05	2.55	0.15	NA	NA	NA	NA
Manganese	mg/L		0.05	NA	< 0.02	< 0.02	< 0.02	< 0.02	< 0.02	< 0.02	< 0.02	0.06	< 0.01	NA	NA	NA	NA
pH	Std Unit		6.5 to 8.5	8.7	7.9	7.6	7.5	7.8	7.8	7.6	7.5	7.6	8.0	NA	NA	NA	NA
Phosphorus	mg/L			NA	< 0.15	< 0.15	< 0.15	< 0.05	< 0.05	< 0.15	< 0.15	< 0.05	NA	NA	NA	NA	NA
Vanadium	ppb			NA	16	11	10	12	12	11	10	8	12	NA	NA	NA	NA
Calcium	mg/L			NA	88	97	94	NA	126	96	94	NA	NA	NA	NA	NA	NA
Magnesium	mg/L			NA	52	48	31	NA	75	44	31	NA	NA	NA	NA	NA	NA
Alkalinity as CaCO3	mg/L			150	123	158	161	120	135	159	161	148	93	NA	NA	NA	NA
Calcium Hardness as CaCO3	mg/L			NA	219	243	235	NA	315	242	235	NA	NA	NA	NA	NA	NA
Magnesium Hardness as CaCO3	mg/L			NA	213	200	127	NA	310	184	127	NA	NA	NA	NA	NA	NA
Total Hardness as CaCO3	mg/L			NA	432	443	362	220	625	426	362	850	628	NA	NA	NA	NA
Silica	mg/L			NA	21	28	26	25	25	27	26	20	18	NA	NA	NA	NA
DBCP	ppb	0.2		< 0.01	NA	NA	NA	BDL	NA	NA	NA	NA	< 0.02	1.1	< 0.02	< 0.02	< 0.02

Notes:

CBS: Coldwater Booster Station
DBS: Del Rio Booster Station
BDL: Below Detection Limit
NA: Not Available

i. Flow is an assumed flow as recommended by the City. Arsenic, nitrate, total chromium, sulfate, TDS, alkalinity, hardness, and DBCP data was obtained from 2008 well driller report. Other water quality parameters including iron, manganese, pH, phosphorous, vanadium, and silica were assumed same as Well 25.
ii. Well is a SRP owned shared well. Well 28 water quality data is average of two sampling events (October 9, 2008 and September 16, 2010). Flow is provided by City (based on ADWR records).
iii. Well is a SRP paired well.
iv. For Pecan Groves Trailer Park Well, DWR# is 55-623980. This well water quality was assumed similar to Well 16b. The well flow rate was assumed as 1,200 gpm.
v. Well 23 is not part of the Wellhead Treatment Study.
vi. Flow is an assumed flow as recommended by the City. Water quality parameters were assumed equal to flow weighted average of Wells 16 and 16b.
vii City provided the well flow rate. The water quality data (including arsenic, nitrate, total chromium, sulfate, TDS, pH, alkalinity, and DBCP) was obtained from ADWR 2002 Well Registry Report.
viii. Well flow is obtained from Draft Water Master Plan Report dated April 5, 2013.

Well 16 - This well discharges to the CBS at a flow rate of 2,200 gpm. The water quality data shows arsenic, nitrate, and total chromium levels of 3.9 ppb, 5.8 mg/L, and < 5 ppb respectively, which are below the primary MCLs. The well water has elevated hardness with a total hardness level of 443 mg/L as $CaCO_3$. The well water has a TDS level of 688 mg/L which is below the City's internal goal for TDS. The iron and manganese levels are considerably below the secondary MCLs. The other water quality parameters do not appear to be an issue for this well.

Well 16b - This well is currently being used for irrigating Friendship Park. The City is planning to use this well for potable water supply, and provide a different source for irrigating the park. In the future, this well will discharge to the CBS at a flow rate of 650 gpm. The water quality data for this well shows arsenic, nitrate, and total chromium levels of 5.3 ppb, 3.6 mg/L, and < 5 ppb, respectively, which are below the primary MCLs. The well water has elevated hardness with a hardness level of 362 mg/L as $CaCO_3$. The well water has a TDS level of 687 mg/L which is below the City's internal goal for TDS. The iron and manganese levels are considerably below the secondary MCLs. The other water quality parameters do not appear to be an issue for this well.

Well 22 - This well is currently not equipped with a pump, therefore, water samples were not collected for this well. According to the City, this well did not receive new source approval due to high nitrate levels. In the absence of current data, the 2008 well driller's report was used to estimate water quality parameters. According to this report, the well water had an arsenic level of 3.1 ppb which is below the primary MCL; a nitrate level of 10 mg/L which is equal to the primary MCL; a total chromium level of 14 ppb which is below the primary MCL; a TDS level of 890 mg/L which is above the City's internal goal for TDS; a hardness level of 220 mg/L; and a DBCP level below the detection limit. Some of the water quality parameters including iron, manganese, pH, phosphorous, vanadium, and silica were assumed similar to Well 25. In the future, the City is planning to equip this well to meet potable water demands and the well will discharge to the CBS. Based on discussion with the City, a flow rate of 1,200 gpm was assumed for this well.

Well 25 - This well discharges to the CBS at a flow rate of 1,200 gpm. The well water has nitrate level of 12.5 mg/L which is higher than the primary MCL. The arsenic and total chromium levels of 4.7 ppb and 17 ppb, respectively, are below the primary MCLs. The well water has elevated hardness with a total hardness level of 625 mg/L as $CaCO_3$. The TDS level of 833 mg/L is higher than the City's internal goal for TDS. The well water has an iron level of 0.31 mg/L, marginally higher than the secondary MCL. The other water quality parameters do not appear to be an issue for this well.

Well 26 - This well is not owned by the City, however, the City is in the process of acquiring the well (currently an agricultural well). In the absence of water quality data, the flow weighted average of Wells 16 and 16b were used to estimate Well 26 water quality. Based on discussion with the City, a flow rate of 1,200 gpm was assumed for this well. In the future, this well will discharge to the CBS.

Pecan Groves Trailer Park Replacement Well - ADWR records indicate three wells are located at the Pecan Groves Trailer Park. The City is planning to acquire one of the wells (ADWR # 55-623980). Upon acquisition of the well, the City plans to abandon the well and drill a new well within 660 feet of the existing well. The new well will discharge to the CBS. Based on discussion

with the City, a flow rate of 1,200 gpm was assumed for the new well. In the absence of water quality data, the new well water quality was assumed similar to Well 16b.

Well 21 - This well discharges to the DBS at a flow rate of 1,200 gpm. However, this well is not being used due to water quality issues. The nitrate level of 10.6 mg/L is higher than the primary MCL. The arsenic and total chromium levels of 2.2 ppb and 11 ppb, respectively, are below the primary MCLs. The well water has elevated hardness with a hardness level of 850 mg/L. The well water has a TDS level of 1,530 mg/L which is considerably higher than the City's internal goal for TDS. At this TDS level, the water is not palatable. The iron and manganese levels are 2.55 mg/L and 0.06 mg/L, respectively, which are higher than the secondary MCLs. The other water quality parameters do not appear to be an issue for this well.

Well 28 - This is a SRP owned shared well. This well discharges to the DBS at a flow rate of 900 gpm. During this study, neither the City nor SRP was able to run this well due to programming issues. In the absence of current sampling, the City provided two sample reports dated October 9, 2008 and September 16, 2010 for this well. The average of these two sampling events was used for this study. The water quality data shows arsenic and nitrate levels of 3 ppb and 8.5 mg/L, respectively. This shows that nitrate level is marginally below the primary MCL. The total chromium level of 21 ppb is below the primary MCL. The DBCP level of < 0.02 ppb is below the primary MCL. The well water has elevated hardness with a hardness level of 628 mg/L. The well water has a TDS level of 1,560 mg/L which is considerably higher than the City's internal goal for TDS. The iron and manganese levels are 0.15 mg/L and < 0.01 mg/L, respectively, which are below the secondary MCLs. The other water quality parameters do not appear to be an issue for this well.

DBCP Sampling of Wells 8A, 17, 23, and 24 - During the spring of 2013, the City also sampled Wells 8A, 17, 23, and 24 for DBCP. The DBCP data shows that Wells 17, 23, and 24 have DBCP levels considerably below the primary MCL. However, Well 8A has a DBCP level of 1.1 ppb which is higher than the primary MCL. At present, Well 8A receives nitrate treatment followed by DBCP treatment, and is then blended with Well 24.

Chromium-VI Sampling for all City Wells - During the spring of 2013, the City also sampled City wells for Cr-VI. Results for this sampling are shown in Table 3.2. At present, there is no primary MCL for Cr-VI, however in the future, the USEPA may promulgate a primary MCL for Cr-VI (refer to Chapters 2 and 4 for a detailed discussion). For this study, it was assumed the primary MCL for Cr-VI would be 10 ppb. The City was able to collect Cr-VI samples for Wells 6, 7, 8A, 10, 11, 12, 15, 16, 16b, 17, 18, 19, 20, 21, 23, 24 and 25. Wells 15, 17, and 24 have Cr-VI levels of 18 ppb, 13 ppb, and 28 ppb, respectively, above the assumed future MCL. The other wells have Cr-VI levels below the assumed future MCL. The Well 28 sample report (dated September 16, 2010) shows a Cr-VI level of less than 10 ppb. Based on discussions with the City, Cr-VI levels for Well 22 and Pecan Groves Replacement Well were assumed to be equal to Well 25 and Well 16b Cr-VI levels, respectively. For the rest of the wells where Cr-VI samples could not be collected (including Wells 14 and 26), it was assumed the Cr-VI level in the well water would be 15 ppb.

Table 3.2 : Chromium-VI Data - Spring 2013

Well #	Concentration, ppb
Well 6	3.7
Well 7	6.6
Well 8A	2.6
Well 10	6.4
Well 11	1.7
Well 12	1.2
Well 14[ii]	15
Well 15	18
Well 16	1.8
Well 16b	1
Well 17	13
Well 18	2.2
Well 19	6
Well 20	2.8
Well 21	6
Well 22[iii]	5.5
Well 23	2.8
Well 24	28
Well 25	5.5
Well 26[ii]	15
Well 28[i]	< 10
Pecan Groves Replacement Well[iv]	1

i. This data is obtained from September 16, 2010 sampling.
ii. In the absence of current data, Cr-VI concentration is assumed as 15 ppb.
iii. Well 22 chromium-VI level was assumed to be equal to Well 25.
iv. Pecan Groves Replacement Well chromium-VI level was assumed to be equal to Well 16b.

3.2 EPDS WATER QUALITY DATA REVIEW

To supplement well water quality data, historical water quality data for all the EPDSs was also reviewed. At present, the City has seven EPDSs, see Table 3.3. For each EPDS, the City provided quarterly water quality data for the last five years (2008 to 2012). Tables 3.4 to 3.8 present quarterly water quality data for each EPDS. The City also provided Cr-VI data for all EPDSs except Del Rio Booster Station, refer to Table 3.9.

Table 3.3 : EPDS Details

EPDS #	EPDS Name	Existing Wells	Future Wells
1	North Side	6, 7, 20	
4	Rancho	10, 11, 12, 18, 19	
5	Coldwater Booster Station	15, 16, 25	16b, 22, 26, Pecan Groves Replacement Well
7	Gateway Water Production Facility	8A, 24	
8	Garden Lakes Water Production Facility	17	
9	Del Rio Booster Station	21, 28	
10	Baker	23	
Not Assigned	Not Assigned		14
Irrigation	Mountain View	5	
Irrigation	Friendship Park	16b	

EPDS 1 (North Side) - EPDS 1 includes Wells 6, 7, and 20. In the last five years, EPDS 1 had a DBCP concentration < 0.02 ppb, arsenic in the range of 1.9 to 5.8 ppb, nitrate in the range of 2.04 to 4.24 mg/L, total chromium in the range of < 5 to 8 ppb, TDS in the range of 265 to 551 mg/L, iron in the range of < 0.05 to 0.14 mg/L, and total hardness in the range of 37 to 301 mg/L as $CaCO_3$. There was no manganese, Cr-VI, phosphorous, vanadium, and silica data available. Table 3.9 shows a Cr-VI level of 5.3 ppb. Except for TDS, the overall water quality data appears to be below the primary and secondary MCLs of the respective contaminants (the TDS secondary MCL is 500 mg/L, however, the City's internal goal is 750 mg/L). Previously, arsenic used to be a concern for this site. However, the City installed and operates a coagulation/filtration treatment facility to reduce elevated arsenic levels.

EPDS 4 (Rancho) - EPDS 4 includes Wells 10, 11, 12, 18, and 19. In the last five years, EPDS 4 had a DBCP concentration < 0.02 ppb, arsenic in the range of 4.8 to 7.1 ppb, nitrate in the range of 4.1 to 5.9 mg/L, total chromium in the range of < 5 to 6 ppb, TDS in the range of 520 to 663 mg/L, iron in the range of < 0.05 to 0.10 mg/L, and total hardness in the range of 321 to 410 mg/L as $CaCO_3$. There was no manganese, Cr-VI, phosphorous, vanadium, and silica data available. Table 3.9 shows a Cr-VI level of 4 ppb. Except for TDS, the overall water quality data appears to be below the primary and secondary MCLs of the respective contaminants.

EPDS 5 (CBS) - EPDS 5 currently includes Wells 15, 16, and 25. In the future, this site may receive water from Wells 16b, 22, 26, and Pecan Groves Replacement Well. In the last five years, EPDS 5 had DBCP concentration < 0.02 ppb, arsenic in the range of 3.5 to 7.9 ppb, nitrate in the range of 4.6 to 9.1 mg/L, total chromium in the range of 5 to 11 ppb, TDS in the range of 468 to 1,310 mg/L, iron in the range of < 0.05 to 0.06 mg/L, and total hardness in the range of 210 to 617 mg/L as

Table 3.4 : 2008 EPDS Water Quality Data

1st Quarter								
	EPDS#	1	4	5	7	8	9	10
Cr-VI	mg/L							
DBCP	ppb			<0.02	<0.02	<0.02		
As	ppb			4	2	3		
NO^-_3	mg/L			4.9	9.1	3.5		
Cr (tot)	ppb							
SO^-_4	mg/L			97	78	60		
TDS	mg/L			700	947	648		
Fe	mg/L			<0.05	<0.05	<0.05		
Mn	mg/L							
pH	mg/L			7.4	7.2	7.7		
P	mg/L							
V	mg/L							
Alkalinity	mg/L			159	164	119		
Total Hardness	mg/L			441	584	301		
Silica	mg/L							

2nd Quarter								
	EPDS#	1	4	5	7	8	9	10
Cr-VI	mg/L							
DBCP	ppb			<0.02	<0.02	<0.02		
As	ppb			5	< 2	3		
NO^-_3	mg/L			6.5	7.6	3.6		
Cr (tot)	ppb							
SO^-_4	mg/L			95.4	78.1	56.8		
TDS	mg/L			468	1060	712		
Fe	mg/L			<0.05	<0.05	<0.05		
Mn	mg/L							
pH	mg/L			7.4	7	7.7		
P	mg/L							
V	mg/L							
Alkalinity	mg/L			151	160	123		
Total Hardness	mg/L			441	609	307		
Silica	mg/L							

3rd Quarter								
	EPDS#	1	4	5	7	8	9	10
Cr-VI	mg/L							
DBCP	ppb			<0.02	0.08	<0.02		
As	ppb							
NO^-_3	mg/L			6.1	7.6	3.5		
Cr (tot)	ppb							
SO^-_4	mg/L							
TDS	mg/L			1310	1080	684		
Fe	mg/L			<0.05	<0.05	<0.05		
Mn	mg/L							
pH	mg/L			7.4	7.3	7.6		
P	mg/L							
V	mg/L							
Alkalinity	mg/L			152	154	121		
Total Hardness	mg/L			425	575	282		
Silica	mg/L							

4th Quarter								
	EPDS#	1	4	5	7	8	9	10
Cr-VI	mg/L							
DBCP	ppb			<0.02	0.17	<0.02		
As	ppb			5.2	2.8	3.4		
NO^-_3	mg/L			5.7	8.5	4.0		
Cr (tot)	ppb							
SO^-_4	mg/L			91	86			
TDS	mg/L			688	740	588		
Fe	mg/L			<0.05	<0.05	<0.05		
Mn	mg/L							
pH	mg/L			7.5	7.5	7.9		
P	mg/L							
V	mg/L							
Alkalinity	mg/L			157	153	125		
Total Hardness	mg/L			210	577	279		
Silica	mg/L							

Blank cell means no data.
Total hardness and alkalinity are expressed as CaCO3.

Table 3.5 : 2009 EPDS Water Quality Data

1st Quarter								
	EPDS#	1	4	5	7	8	9	10
Cr-VI	mg/L							
DBCP	ppb	<0.02	<0.02	<0.02	<0.02	<0.02		
As	ppb	4.7	6.2	3.5	4.3	4.1		
NO^-_3	mg/L	2.5	5.3	8.9	4.3	4.8		
Cr (tot)	ppb							
SO^-_4	mg/L	33.4	92.4	87.7	96.9	63.5		
TDS	mg/L	292		880	627	654		
Fe	mg/L	<0.05	<0.05	<0.05	<0.05	<0.05		
Mn	mg/L							
pH	mg/L	8	7.6	7.2	7.3	7.8		
P	mg/L							
V	mg/L							
Alkalinity	mg/L	147	148	163	170	123		
Total Hardness	mg/L	37	347	617	469	312		
Silica	mg/L							

2nd Quarter								
	EPDS#	1	4	5	7	8	9	10
Cr-VI	mg/L							
DBCP	ppb	<0.02	<0.02	<0.02	<0.02	<0.02		
As	ppb	4.5	5.6	6	2.3	3.8		
NO^-_3	mg/L	2.4	5.1	5.8	8.5	4.1		
Cr (tot)	ppb							
SO^-_4	mg/L	31.6	90	86.9	91.2	57.5		
TDS	mg/L	309	594	708	957	634		
Fe	mg/L	<0.05	0.1	0.05	<0.05	<0.05		
Mn	mg/L							
pH	mg/L	7.9	7.6	7.5	7.6	7.6		
P	mg/L							
V	mg/L							
Alkalinity	mg/L	146	151	156	187	125		
Total Hardness	mg/L	66	339	407	634	281		
Silica	mg/L							

3rd Quarter								
	EPDS#	1	4	5	7	8	9	10
Cr-VI	mg/L							
DBCP	ppb		<0.02	<0.02				
As	ppb		7.1	7.8				
NO^-_3	mg/L		5.3	6.2				
Cr (tot)	ppb		6	11				
SO^-_4	mg/L		88.2	88.4				
TDS	mg/L		560	753				
Fe	mg/L		<0.05	<0.05				
Mn	mg/L							
pH	mg/L		7.7	7.5				
P	mg/L							
V	mg/L							
Alkalinity	mg/L		150	156				
Total Hardness	mg/L		354	420				
Silica	mg/L							

4th Quarter								
	EPDS#	1	4	5	7	8	9	10
Cr-VI	mg/L							
DBCP	ppb	<0.02	<0.02	<0.02	<0.02	<0.02		<0.02
As	ppb	2.4	4.8	4.5	3.6	3.8		3
NO^-_3	mg/L	2.5	5.4	5.5	6.9	3.5		5.5
Cr (tot)	ppb							
SO^-_4	mg/L	35.5	89.1	97.3	97	66.6		111
TDS	mg/L	297	564	773	987	556		773
Fe	mg/L	<0.05	<0.05	0.05	<0.05	<0.05		<0.05
Mn	mg/L							
pH	mg/L	7.4	7.6	7.6	7.6	8		7.2
P	mg/L							
V	mg/L							
Alkalinity	mg/L	137	149	161	161	141		197
Total Hardness	mg/L	67	353	427	441	257		427
Silica	mg/L							

Blank cell means no data.
Total hardness and alkalinity are expressed as CaCO3.

Table 3.6 : 2010 EPDS Water Quality Data

1st Quarter								
	EPDS#	1	4	5	7	8	9	10
Cr-VI	mg/L							
DBCP	ppb	<0.02	<0.02	<0.02	<0.02	<0.02		<0.02
As	ppb	2	4.9	5.6	4.5	3.7		4.1
NO^-_3	mg/L	3.2	4.5	5.1	6.3	4.7		5.7
Cr (tot)	ppb	7	5			<5		
SO^-_4	mg/L	40.4	92.4	92.8	100	71.9		116
TDS	mg/L	356	632	736	920	676		940
Fe	mg/L	<0.05	<0.05	0.06	<0.05	<0.05		0.23
Mn	mg/L							
pH	mg/L	7.7	7.6	7.5	7.6	8.1		7.3
P	mg/L							
V	mg/L							
Alkalinity	mg/L	137	140	159	172	130		199
Total Hardness	mg/L	89	410	437	588	280		547
Silica	mg/L							

2nd Quarter								
	EPDS#	1	4	5	7	8	9	10
Cr-VI	mg/L							
DBCP	ppb	<0.02	<0.02	<0.02	<0.02	<0.02		<0.02
As	ppb	5.2	5.9	6.9	3.4	4.5		3.7
NO^-_3	mg/L	2.8	5.1	5.8	8.0	4.3		5.1
Cr (tot)	ppb	6	5	10	<5	<5		<5
SO^-_4	mg/L	37.8	86.2	99.8	91.8	71		114
TDS	mg/L	310	600	668	987	620		716
Fe	mg/L	<0.05	<0.05	<0.05	<0.05	0.24		<0.05
Mn	mg/L							
pH	mg/L	7.5	7.6	7.4	8	8.1		7.7
P	mg/L							
V	mg/L							
Alkalinity	mg/L	132	147	152	171	137		192
Total Hardness	mg/L	70	339	401	570	298		423
Silica	mg/L							

3rd Quarter								
	EPDS#	1	4	5	7	8	9	10
Cr-VI	mg/L							
DBCP	ppb	<0.02	<0.02	<0.02	<0.02	<0.02		<0.02
As	ppb	2.6	5.1	5.8	2.2	3.7		3
NO^-_3	mg/L	2.4	4.7	6.1	8.0	5.0		5.2
Cr (tot)	ppb	8	5	11	5	<5		<5
SO^-_4	mg/L	33	83.9	95.2	90.4	65.7		101
TDS	mg/L	303	634	804	1180	771		876
Fe	mg/L	<0.05	<0.05	<0.05	<0.05	<0.5		<0.05
Mn	mg/L							
pH	mg/L	7.6	8	7.9	7.5	8		7.6
P	mg/L							
V	mg/L							
Alkalinity	mg/L	143	144	154	180	122		195
Total Hardness	mg/L	59	333	398	604	307		410
Silica	mg/L							

4th Quarter								
	EPDS#	1	4	5	7	8	9	10
Cr-VI	mg/L							
DBCP	ppb	<0.02	<0.02	<0.02	<0.02	<0.02		<0.02
As	ppb	2.4	5.6	5.7	3.2	4.5		3.4
NO^-_3	mg/L	2.6	4.6	6.4	9.9	5.3		5.9
Cr (tot)	ppb	<5	<5	8	<5	<5		<5
SO^-_4	mg/L	34.8	87.6	91.5	89.8	68.8		97.5
TDS	mg/L	296	564	672	820	653		660
Fe	mg/L	<0.05	<0.05	<0.05	<0.5	<0.5		<0.05
Mn	mg/L							
pH	mg/L	7.8	7.6	7.7	7.5	7.9		7.3
P	mg/L							
V	mg/L							
Alkalinity	mg/L	143	145	154	171	123		200
Total Hardness	mg/L	83	337	406	601	313		420
Silica	mg/L							

Blank cell means no data.
Total hardness and alkalinity are expressed as CaCO3.

Table 3.7 : 2011 EPDS Water Quality Data

1st Quarter								
	EPDS#	1	4	5	7	8	9	10
Cr-VI	mg/L							
DBCP	ppb	<0.02	<0.02	<0.02	<0.02	<0.02		<0.02
As	ppb	3.9	5.5	4.7	3.5	4.2		3.2
NO^-_3	mg/L	2.4	4.5	5.0	8.3	4.9		4.3
Cr (tot)	ppb	5	5	5	<5	<5		<5
SO^-_4	mg/L	30	82	84.1	82.6	63.6		100
TDS	mg/L	271	520	644	940	616		707
Fe	mg/L	<0.05	<0.5	<0.5	<0.5	<0.05		<0.05
Mn	mg/L							
pH	mg/L	8.3	7.9	7.4	7.4	7.7		8
P	mg/L							
V	mg/L							
Alkalinity	mg/L	140	140	160	157	121		198
Total Hardness	mg/L	70	335	385	587	293		389
Silica	mg/L							

2nd Quarter								
	EPDS#	1	4	5	7	8	9	10
Cr-VI	mg/L							
DBCP	ppb	<0.02	<0.02	<0.02	<0.02	<0.02		<0.02
As	ppb	2.2	6.1	5.9	3.3	5.8		3.2
NO^-_3	mg/L	2.1	4.1	<0.05	7.0	0.0		6.4
Cr (tot)	ppb	8	5	10	<5	<5		<5
SO^-_4	mg/L	27.4	80.3	83.4	79	59		104
TDS	mg/L	277	620	704	840	712		792
Fe	mg/L	<0.05	<0.05	<0.05	<0.05	0.2		<0.05
Mn	mg/L							
pH	mg/L	8.5	7.5	8.1	7.4	7.8		7.9
P	mg/L							
V	mg/L							
Alkalinity	mg/L	161	136	147	176	122		202
Total Hardness	mg/L	51	328	400	609	302		429
Silica	mg/L							

3rd Quarter								
	EPDS#	1	4	5	7	8	9	10
Cr-VI	mg/L							
DBCP	ppb	<0.02	<0.02	<0.02	<0.02	<0.02		<0.02
As	ppb	1.9	5.5	5.7	3.2	4.5		2.8
NO^-_3	mg/L	2.0	4.9	6.3	7.6	3.9		6.2
Cr (tot)	ppb	7	<5	10	16	<5		<5
SO^-_4	mg/L	27.2	90.1	88.2	92.4	56.7		107
TDS	mg/L	288	631	856	987	684		888
Fe	mg/L	0.05	<0.05	<0.5	<0.05	<0.05		<0.05
Mn	mg/L							
pH	mg/L	7.7	7.7	7.6	7.8	7.9		8
P	mg/L							
V	mg/L							
Alkalinity	mg/L	168	145	150	133	122		202
Total Hardness	mg/L	59	327	409	467	281		444
Silica	mg/L							

4th Quarter								
	EPDS#	1	4	5	7	8	9	10
Cr-VI	mg/L							
DBCP	ppb	<0.01	<0.02	<0.02	<0.02	<0.02		<0.02
As	ppb	2.1	5.7	5.5	3.1	4.2		2.9
NO^-_3	mg/L	2.7	5.1	5.4	8.1	6.7		6.2
Cr (tot)	ppb	6	<5	7	<5	<5		<5
SO^-_4	mg/L	31.7	75.6	68.4	87.4	71.9		95
TDS	mg/L	316	663	720	1180	784		813
Fe	mg/L	<0.05	<0.05	<0.05	<0.05	<0.05		0.93
Mn	mg/L							
pH	mg/L	7.9	7.6	7.6	7.7	7.8		7.9
P	mg/L							
V	mg/L							
Alkalinity	mg/L	144	144	154	140	121		193
Total Hardness	mg/L	64	341	383	269	<7		433
Silica	mg/L							

Blank cell means no data.
Total hardness and alkalinity are expressed as CaCO3.

Table 3.8 : 2012 EPDS Water Quality Data

1st Quarter								
	EPDS#	1	4	5	7	8	9	10
Cr-VI	mg/L							
DBCP	ppb	<0.02	<0.02	<0.02		<0.02		<0.02
As	ppb	3.7	6.2	6.5		5		4.6
NO^-_3	mg/L	2.6	5.9	4.6		6.4		5.4
Cr (tot)	ppb	5	6	10		<5		<5
SO^-_4	mg/L	32.4	86	81.9		71.9		113
TDS	mg/L	282	572	636		636		773
Fe	mg/L	<0.05	<0.05	<0.05		<0.05		<0.05
Mn	mg/L							
pH	mg/L	7.7	7.8	7.5		8		7.4
P	mg/L							
V	mg/L							
Alkalinity	mg/L	155	152	154		129		200
Total Hardness	mg/L	77	321	365		281		447
Silica	mg/L							

2nd Quarter								
	EPDS#	1	4	5	7	8	9	10
Cr-VI	mg/L							
DBCP	ppb	<0.02	<0.02	<0.02	0.13	<0.02		<0.02
As	ppb	3.5	6.4	5.6	4.5	4.7		4.1
NO^-_3	mg/L	2.5	4.7	5.9	6.3	5.3		5.3
Cr (tot)	ppb	5	5	5	<5	<5		<5
SO^-_4	mg/L	28.7	86.9	86.4	80	89.6		107
TDS	mg/L	265	566	672	1050	712		904
Fe	mg/L	<0.05	<0.05	<0.05	<0.05	<0.05		<0.05
Mn	mg/L							
pH	mg/L	7.8	7.9	7.8	7.5	7.4		7.3
P	mg/L							
V	mg/L							
Alkalinity	mg/L	161	156	160	163	178		207
Total Hardness	mg/L	71	325	420	597	387		447
Silica	mg/L							

3rd Quarter								
	EPDS#	1	4	5	7	8	9	10
Cr-VI	mg/L							
DBCP	ppb	<0.02	<0.02	<0.02	0.31	<0.02		<0.02
As	ppb	5.8	7.1	7.9	6.5	4.9		4.4
NO^-_3	mg/L	4.2	5.0	7.2	7.8	5.9		5.8
Cr (tot)	ppb	<5	<5	10	5	<5		<5
SO^-_4	mg/L	77.2	88.3	93	88.2	71.1		111
TDS	mg/L	551	614	824	1030			892
Fe	mg/L	0.14	<0.05	<0.05	<0.05	<0.05		<0.05
Mn	mg/L							
pH	mg/L	7.9	7.7	7.5	7.6	7.8		
P	mg/L							
V	mg/L							
Alkalinity	mg/L	152	157	157	157	131		208
Total Hardness	mg/L	301	339	476	570	260		429
Silica	mg/L							

4th Quarter								
	EPDS#	1	4	5	7	8	9	10
Cr-VI	mg/L							
DBCP	ppb	<0.02	<0.02	<0.02		<0.02		<0.02
As	ppb	2.7	6.3	6.1		5.5		4.2
NO^-_3	mg/L	2.7	4.8	9.1		5.7		6.2
Cr (tot)	ppb	<5	5	8		<5		<5
SO^-_4	mg/L	34.4	88.6	110		86.1		113
TDS	mg/L	308	569	900		636		808
Fe	mg/L	<0.05	<0.05	<0.05		<0.05		<0.05
Mn	mg/L							
pH	mg/L	7.7	8.1	7.9		8.2		7.3
P	mg/L							
V	mg/L							
Alkalinity	mg/L	154	147	148		159		201
Total Hardness	mg/L	89	324	526		345		438
Silica	mg/L							

Blank cell means no data.
Total hardness and alkalinity are expressed as CaCO3.

Table 3.9 : Chromium-VI Data for EPDS

EPDS #	Concentration, ppb
EPDS 1 (North Side)	5.3
EPDS 4 (Rancho)	4
EPDS 5 (CBS)	4.3
EPDS 7 (Gateway)	2.8
EPDS 8 (Garden Lakes)	0.28
EPDS 9 (DBS)[i]	-
EPDS 10 (Baker)	2.7

i. EPDS 9 has been offline for several years, therefore no Cr-VI data.

$CaCO_3$. There was no manganese, Cr-VI, phosphorous, vanadium, and silica data available. The nitrate and arsenic levels at this site are marginally below the primary MCL. Also, TDS levels are elevated compared to the City's internal goal and the secondary MCL. This site also has very hard water. Apart from these water quality parameters, this EPDS appears to have overall water quality data below the primary and secondary MCLs of the respective contaminants. Table 3.9 shows Cr-VI level of 4.3 ppb which is below the potential primary MCL of 10 ppb.

EPDS 7 (Gateway) - EPDS 7 includes Wells 8A and 24. This site has nitrate and DBCP treatment facilities. In the last five years, EPDS 7 had DBCP typically in the range of < 0.02 to 0.17 ppb (with only one single reading of 0.31 ppb in 2012; it is noted that the primary MCL is computed as an average of quarterly samples), arsenic in the range of < 2 to 6.5 ppb, nitrate in the range of 4.3 to 9.9 mg/L, total chromium in the range of < 5 to 16 ppb, TDS in the range of 627 to 1,180 mg/L, iron < 0.05 mg/L, and total hardness in the range of 269 to 634 mg/L as $CaCO_3$. There was no manganese, Cr-VI, phosphorous, vanadium, and silica data available. TDS levels at this site are very high compare to the City's internal goal and the secondary MCL. This site also has very hard water. Apart from these water quality parameters, this EPDS appears to have overall water quality data below the primary and secondary MCLs of the respective contaminants. Table 3.9 shows Cr-VI level of 2.8 ppb which is below the potential primary MCL of 10 ppb.

EPDS 8 (Garden Lakes) - EPDS 8 includes only one well, Well 17, a SRP paired well. The Garden Lakes site has a nitrate treatment facility. In the last five years, EPDS 8 had a DBCP concentration < 0.02 ppb, arsenic in the range of 3 to 5.8 ppb, nitrate in the range of 3.5 to 6.7 mg/L, total chromium < 5 ppb, TDS in the range of 556 to 784 mg/L, iron in the range of < 0.05 to 0.24 mg/L, and total hardness in the range of 257 to 387 mg/L as $CaCO_3$. There was no manganese, Cr-VI, phosphorous, vanadium, and silica data available. Table 3.9 shows a Cr-VI level of 0.28 ppb. Except for TDS, the overall water quality data appears to be below the primary and secondary MCLs of the respective contaminants. This site has very hard water.

EPDS 9 (DBS) - EPDS 9 includes Wells 21 and 28. This site has been offline for several years due to poor water quality associated with these two wells. As a result, City does not have any water quality data for this site.

EPDS 10 (Baker) - Although EPDS 10 is beyond the scope of this study, a brief discussion is being included. The EPDS 10 includes only one well, Well 23. In the last five years, EPDS 10 had a DBCP concentration < 0.02 ppb, arsenic in the range of 2.8 to 4.6 ppb, nitrate in the range of 4.3 to 6.4 mg/L, total chromium < 5 ppb, TDS in the range of 660 to 940 mg/L, iron in the range of <0.05 to 0.23 mg/L, and total hardness in the range of 389 to 547 mg/L as $CaCO_3$. There was no manganese, Cr-VI, phosphorous, vanadium, and silica data available. Most of the sample points for TDS are above the City's internal goal of 750 mg/L and secondary MCL of 500 mg/L. This site also has hard water. Apart from these water quality parameters, this site appears to have overall water quality data below the primary and secondary MCLs of the respective contaminants. Table 3.9 shows Cr-VI level of 2.7 ppb which is below the potential primary MCL of 10 ppb.

3.3 WELL UTILIZATION RATE

The City provided five year annual pumping data for all the City wells. Based on annual pumping data and well flow rates, the well utilization rates were computed for all the wells included in this study (refer to Table 3.10). For the wells without any pumping data, a well utilization rate of 26% was assumed as per discussions with the City. For each EPDS, the following average utilization rates were used:

- For Coldwater Booster Station - 20%.
- For Well 14 - 26%.
- For Del Rio Booster Station - 26%.
- For Garden Lakes Water Production Facility - 21%.
- For Gateway Water Production Facility - 20%.

3.4 SUMMARY AND CONCLUSIONS

Based on the water quality review, the following issues were identified by well (refer to Table 3.11):

Table 3.11 : Wells and Contaminants of Concern

Wells	EPDS Name	Contaminants of Concern
Well 14	Not Assigned	Arsenic and Cr-VI (future)
Well 15	CBS	Nitrate and Cr-VI (future)
Well 16	CBS	
Well 16b	CBS	
Well 22	CBS	Nitrate and TDS
Well 25	CBS	Nitrate and TDS
Well 26	CBS	Cr-VI (future)
Pecan Groves Replacement Well	CBS	
Well 21	DBS	Nitrate, TDS, and Iron
Well 28	DBS	Nitrate and TDS
Well 8A	Gateway	Nitrate and DBCP
Well 24	Gateway	Cr-VI (future)
Well 17	Garden Lakes	Nitrate and Cr-VI (future)

The water quality issues associated with individual EPDS are as follows:

- Coldwater Booster Station (EPDS 5) - Nitrate and Cr-VI (future).
- Del Rio Booster Station (EPDS 9) - Nitrate, TDS, and iron.
- Gateway Water Production Facility (EPDS 7) - Nitrate, DBCP, and Cr-VI (future).
- Garden Lakes Water Production Facility (EPDS 8) - Nitrate and Cr-VI (future).

Based on the above water quality review, NCS recommends the following future monitoring:

- For all the Wells / EPDS, the City should collect Cr-VI water samples at least once a year.
- For Well 14, the City should collect phosphorus, vanadium, and silica water samples at least once a year until a treatment facility is installed.

Table 3.10 : Well Utilization Rate

ADWR Registration #	Well	Location	Well Utilization Rate, %	Comment
55-583017	14		26%	Assumed
55-578749	15	CBS	16%	
55-200566	16	CBS	53%	
55-807953	16b	CBS	26%	Assumed
55-217002	22[i]	CBS	26%	Assumed
55-217001	25	CBS	16%	Assumed (same as Well 15)
55-618650	26[i]	CBS	26%	Assumed
55-623980	Pecan Groves Replacement Well[i]	CBS	26%	Assumed
55-203924	21	DBS	26%	Assumed
55-217538	28	DBS	26%	Assumed
55-599019	8A	Gateway	20%	
55-210430	24	Gateway	25%	
55-201730	17	Garden Lakes	21%	

i. Assumed well flow rate per discussion with the City.

CITY OF AVONDALE
WELLHEAD TREATMENT STUDY

FINAL REPORT

CHAPTER 4 - TREATMENT OPTIONS FOR HEXAVALENT CHROMIUM

TABLE OF CONTENTS

4.0 INTRODUCTION 4-1

4.1 CHROMIUM CHEMISTRY 4-2

4.2 TREATMENT TECHNOLOGIES 4-2
- 4.2.1 Definition of Terms Used in Treatment Processes 4-2
- 4.2.2 Weak Base Anion Resin 4-3
- 4.2.3 Strong Base Anion Resin 4-3
- 4.2.4 Reduction Coagulation Filtration 4-4
- 4.2.5 Reverse Osmosis 4-4
- 4.2.6 Chemical Reductive Media Adsorption 4-5

4.3 SELECTION OF TREATMENT TECHNOLOGIES 4-5
- 4.3.1 IX using Weak Base Anion Resin 4-6
  - 4.3.1.1 WBA Spent Resin Disposal 4-6
  - 4.3.1.2 Cost Estimate 4-7
- 4.3.2 IX using Strong Base Anion Resin 4-7
  - 4.3.2.1 Residuals Handling 4-8
  - 4.3.2.2 Cost Estimate 4-9
- 4.3.3 Reduction Coagulation and Filtration System 4-9
  - 4.3.3.1 Residuals Handling 4-10
  - 4.3.3.2 Cost Estimate 4-10
- 4.3.4 Cost and Non Cost Comparison of Technologies 4-11

4.4 RECOMMENDED TECHNOLOGY 4-11

4.5 POTENTIAL COST OF CHROMIUM-VI TREATMENT 4-12

CITY OF AVONDALE
WELLHEAD TREATMENT STUDY

FINAL REPORT

CHAPTER 4 - TREATMENT OPTIONS FOR HEXAVALENT CHROMIUM

LIST OF FIGURES

Figure 4.1 Chromium-VI Removal IX with WBA Resin - Process Schematic . . . After 4-11

LIST OF TABLES

Table 4.1 Chromium-VI Data 4-1

Table 4.2 Design Criteria for Weak Base Anion Resin System 4-6

Table 4.3 WBA IX System Capital and Annual O&M Costs . . . . . After 4-7

Table 4.4 Design Criteria for Strong Base Anion Resin System 4-8

Table 4.5 IX with SBA Resin - Spent Brine Characteristics 4-8

Table 4.6 SBA IX System Capital and Annual O&M Costs . . . . . After 4-9

Table 4.7 Design Criteria for Reduction Coagulation and Filtration System 4-10

Table 4.8 RCF System Capital and Annual O&M Costs . . . . . After 4-11

Table 4.9 Cost Comparison of Treatment Alternatives 4-11

Table 4.10 Cost of Cr-VI Treatment Facilities . . . . . After 4-12

CITY OF AVONDALE
WELLHEAD TREATMENT STUDY

FINAL REPORT

CHAPTER 4 - TREATMENT OPTIONS FOR HEXAVALENT CHROMIUM

4.0 INTRODUCTION

The current USEPA standard for total chromium (Cr-III and Cr-VI) is 100 ppb. However, due to potential adverse health effects of high concentrations of Cr-VI in drinking water, USEPA is considering lowering the MCL to between 5 and 20 ppb. The City wells have hexavalent chromium (Cr-VI) levels in the range of 1 to 28 ppb, refer to Table 4.1. For this study, NCS recommended a potential MCL of 10 ppb for Cr-VI to evaluate future impacts of this MCL. Considering this potential MCL, this chapter describes the potential Cr-VI removal technologies currently available along with brief process descriptions and implementation considerations. For the applicable technologies, information related to their design, operation and maintenance (O&M), and related environmental factors are described. The most economical technology was selected based on estimated costs and non-cost factors. The specifics of Cr-VI chemistry as applicable to treatment technologies are also discussed.

Table 4.1 : Chromium-VI Data

Well #	Concentration, ppb
Well 6	3.7
Well 7	6.6
Well 8A	2.6
Well 10	6.4
Well 11	1.7
Well 12	1.2
Well 14[ii]	15
Well 15	18
Well 16	1.8
Well 16b	1
Well 17	13
Well 18	2.2
Well 19	6
Well 20	2.8
Well 21	6
Well 22[iii]	5.5
Well 23	2.8
Well 24	28
Well 25	5.5
Well 26[ii]	15
Well 28[i]	< 10
Pecan Groves Replacement Well[iv]	1

i. This data is obtained from September 16, 2010 sampling.
ii. In the absence of current data, Cr-VI concentration is assumed as 15 ppb.
iii. Well 22 chromium-VI level was assumed to be equal to Well 25.
iv. Pecan Groves Replacement Well chromium-VI level was assumed to be equal to Well 16b.

4.1 CHROMIUM CHEMISTRY

Chromium is rarely found as a pure metal in nature. Chromium (Cr-III) is one of the 10 most abundant compounds. Chromium is an odorless and tasteless metallic element, and is found naturally in rocks, plants, soil and volcanic dust, humans and animals. It can exist in oxidation states of -4 to +6, and the most common forms of chromium that occurs in natural waters are trivalent chromium (Cr-III), and Cr-VI. Cr-III occurs in chromic compounds (Cr_2O_3 and $Cr(OH)_3$), while Cr-VI occurs in chromate (CrO_4^{2-}) and dichromate ($Cr_2O_7^{2-}$) compounds. Cr-III is considered an essential human dietary element, and is found in many vegetables, fruits, meats, grains and yeast. Many industries, including leather tanning, catalysts, pigments and paints, fungicides, ceramic and glass manufacturing, photography, production of chrome alloy and chromium metal production, chrome plating, and corrosion control use chromium-based salts.

In water, presence of Cr-III or Cr-VI depends upon the redox potential, pH, and presence of other water constituents. Cr-III is a cation (positively charged ions such as $CrOH^{2+}$ or $Cr(OH)_2^{+}$) while Cr-VI is an anion (negatively charged ions such as CrO_4^{2-} and $Cr_2O_7^{2-}$). Cr-VI is more soluble than Cr-III in water, and therefore, is relatively more mobile. Cr-VI is converted to Cr-III by reduction reactions and vice versa. Therefore, Cr-VI can occur in groundwater naturally (from anthropogenic activities) and can be reduced to Cr-III at low pH and oxygen levels. Under most natural groundwater conditions, Cr-III is generally insoluble and occurs at concentrations less than 50 ppb. Cr-VI occurs under oxidizing and alkaline conditions (pH > 6.0) as an anion generally forming chromate and dichromate.

4.2 TREATMENT TECHNOLOGIES

Cr-VI is a strong oxidant and therefore can be reduced in presence of electron donors, such as ferrous ion and sulfides. In its reduced form, Cr-III precipitates readily at neutral to basic pH levels. Reduction of Cr-VI with ferrous ion is a relatively fast reaction and can be completed in less than ten minutes. Since Cr-VI is an anion, it can be adsorbed onto ion exchange and other absorbents.

4.2.1 Definition of Terms Used in Treatment Processes

Bed Volume (BV): The volume of media in an adsorption or IX vessel (expressed as ft^3 or gallons).

Breakthrough: The appearance of an unwanted contaminant at an unacceptable concentration in the effluent.

Backwash: The process in which a countercurrent flow is passed through the media in order to remove accumulated particles (inert solids) from the media and to achieve bed expansion. During this process, the contaminants adsorbed on the media are not removed (as with regeneration).

Empty Bed Contact Time (EBCT): The theoretical time that water is in contact with the adsorption media or IX resin (computed as the BV divided by the flow rate through a vessel).

Exhaustion: The depletion of the adsorptive capacity of the media in the service mode.

Regeneration: The process of passing a high strength brine solution in co-current flow in order to remove the adsorbed contaminants and restore the capacity of the adsorption media or IX resin.

Run Length: The bed volumes of water treated to reach exhaustion.

4.2.2 Weak Base Anion Resin

Weak Base Anion (WBA) resins use a tertiary amine group that does not have a permanent positive charge. WBA resins are operated at pH level less than 6. Based on ongoing Water Research Foundation (WRF) Project # 4450, the following observations were made:

1. Tested 10 source waters with varying Cr-VI, nitrate, sulfate and uranium levels.
2. A pH of 6.0 was determined to be optimal.
    a. Acid or carbon dioxide may be used for pH reduction.
    b. A reduction in pH first for optimal ion exchange and then increasing the pH in finished water may be costly, especially for source waters with high alkalinity levels.
3. The WBA resin testing was conducted using two columns, each consisting of resins with 1.5 minutes of Empty Bed Contact Time (EBCT).
4. At influent Cr-VI level of 35 ppb (nitrate = 0.1 mg/L, sulfate = 19 mg/L), 100,000 bed volumes were treated with an EBCT of 1.5 minutes.
    a. Because of higher bed volumes, WBA may be used as a throw away resin.
5. A 500 gpm demonstration study at Glendale, CA indicated that WBA (PWA7) can treat up to 170,000 to 190,000 bed volumes using a lead-lag operation.
    a. Influent Cr-VI concentration ranged from 30 to 40 ppb.
    b. Other constituents removed included copper, vanadium and uranium.
6. At influent Cr-VI level of 35 ppb, DOW PWA7 and Purolite S106 appear to perform similar for a source water with a Cr-VI level of 10 ppb.
7. Background sulfate levels up to 165 mg/L did not impact Cr-VI removal.
8. Background sulfate levels up to 59 mg/L, nitrate of 46 mg/L (as NO_3) and perchlorate of 10 ppb impacted Cr-VI (influent level of 40 ppb)removal.
9. WBA treatment would require an EBCT of 3 minutes, or higher, due to slow uptake of Cr-VI.
10. WBA resin is assumed to be disposed of after its exhaustion. Since the studies are ongoing, disposal characteristics using toxicity characteristics leaching procedure (TCLP) or waste extraction test (WET) results are not available.
11. Uranium is removed by WBA resin while competing with chromium, nitrate and sulfate, etc., and its removal may pose a problem for resin disposal.

4.2.3 Strong Base Anion Resin

Strong Base Anion (SBA) resin generally has a quarternary amine group as the fixed positive charge. SBA can be operated up to pH value of 13. Based on ongoing WRF Projects (# 4450 and # 4423), the following observations were made:

1. An EBCT of 3 minutes was used.
2. DOW SAR and Purolite A600E resins were tested.
3. Up to 12,000 bed volumes were treated for low nitrate and sulfate source waters.

4. Based on observed bed volumes treated which may be impacted by presence of other water constituents, SBA resin would require regeneration on a regular basis.
5. Both resins were regenerated using 14% NaCl at a loading rate of 15 lb/cf.
    a. Recovery of resin varied with source water but generally was in the range of 74 to 108%.
    b. Disposal of regenerant may be an issue depending on TCLP or WET tests.
6. Presence of high sulfate (165 mg/L) impacted the breakthrough of Cr-VI (10 ppb, 2,000 BV vs. >12,000 BV at sulfate level of 16 mg/L).
7. Presence of nitrate and sulfate adversely impact Cr-VI removal.
8. Accumulation of Cr-VI appears to be linear with the number of times the brine is recycled.

4.2.4 Reduction Coagulation Filtration

Reduction followed by flocculation/chlorination/polymer/filtration (RCF) can be an effective technology for Cr-VI removal. Based on ongoing WRF Projects (# 4450 and # 4418) the following observations were made:

1. Ferrous iron reduction doses of 2 mg/L or higher (Fe:Cr:50:1) may be required.
2. Aeration or chlorination is required for oxidation of unreacted ferrous ion.
    a. Chlorination has faster kinetics.
3. Cr-VI at an initial concentration of 38 ppb was reduced to 4.7, 1.4 and below detection at ferrous dose of 1, 2 and 3 mg/L, respectively.
    a. Filter pore size did not impact the removal.
4. Cr-VI at an initial concentration of 56 ppb was reduced to 16.8, 1.8 and 0.7 ppb detection at ferrous dose of 1, 2 and 3 mg/L, respectively.
5. Presence of background organics impacted the reduction of Cr-VI.
6. A flocculation time of 10 minutes was sufficient for reaction.
    a. Higher reaction times may be required due to other water constituents.
7. Reduction of chromium with ferrous iron will reduce pH of water due to reaction, and therefore, alkalinity of water, and pH increase for the finished water may be required.

4.2.5 Reverse Osmosis

The 2004 Awwarf study (Brandhuber et al.) investigated two reverse osmosis (RO), three nano filtration (NF) and one tight ultra filtration (UF) membranes. Membrane testing consisted of a bench-scale cross-flow flat sheet filtration unit (Osmonics) using a 0.45 µm filtered water. For synthetic water, RO membrane (Low Fouling Composite LFC-1) rejected greater than 90% of arsenate, chromate and perchlorate. Removal of anions by two NF and one UF membranes increased with increasing pH at a constant conductivity but decreased with increasing conductivity at a constant pH. Experiments with three natural waters on two RO, two NO and one UF membrane indicated that the removal of anions was related to membrane pore size. One RO (LFC-1) rejected more than 90% of Cr-VI, while the rejection for the UF membrane averaged approximately 5%. Long term membrane degradation is expected due to the oxidative nature of Cr-VI.

Therefore, depending on the pore size selected, both NF and RO membranes can reduce Cr-VI. The major factors with high pressure membrane treatment would be required pretreatment, post treatment, high energy costs and disposal of residuals.

4.2.6 Chemical Reductive Media Adsorption

Similar to adsorption of arsenic on media with iron oxides, media with ferrous ion could be used for removal of Cr-VI by adsorption. A 2004 AwwaRF study conducted bench column studies using GFH treating synthetic water consisting of 100 ppb of Cr-VI and arsenic with EBCTs of 2.5 and 5 minutes. For the 5 minute EBCT, the chromium breakthrough was observed at approximately 1,000 BVs. In comparison, arsenic breakthrough was not observed up to 12,000 BVs. Bench equilibrium experiments showed that the Cr-VI removal was much better at pH of 5 (almost 100% reduction) when compared to pH values of 7 (about 60% reduction) or 9 (about 50% reduction) with a starting Cr-VI concentration of 100 ppb and contact time of 2 hours. Information solicited from the GFH media manufacturer indicated the media is not expected to reduce Cr-VI significantly.

4.3 SELECTION OF TREATMENT TECHNOLOGIES

Based on the results of the Water Research Foundation studies, WBA, SBA and RCF technologies appear to perform well for Cr-VI removal; however these technologies are complex. WBA may be used as a throw away resin due to relatively high bed volumes treated but the costs associated with a decrease in pH to 6.0 for optimal performance and then increasing the pH to around 8.0 for the water to be non-corrosive may be high. SBA resin would require frequent regenerations and brine disposal may be an issue if chromium levels are higher than allowable limits (5 mg/L) for solid waste landfill. Presence of other constituents such as sulfate, nitrate, arsenic, TDS, radionuclides, etc. may also impact the volume of water treated and disposal of brine. Brine treatment and/or restricting the use of regenerant to a limited number of times may reduce the Cr-VI levels in brine, however, at higher operational costs. RCF can be effective but may require a number of chemicals and reactors to achieve the results thereby resulting in complicated treatment operations. In addition, disposal of sludge (generated from coagulant) may have the same issues as with disposal of resins and/or brine. High pressure membranes may be used for Cr-VI removal but may require pretreatment and post treatment. In addition, energy costs for high pressure membranes are generally higher than other treatment processes. Adsorption media for Cr-VI reduction may not be cost effective due to limited treatment capacity.

Based on the above-mentioned description of technologies and associated issues, out of the five treatment technologies, the following three technologies are considered as the most appropriate for Cr-VI removal for the City:

Alternative 1 - IX using Weak Base Anion Resin
Alternative 2 - IX using Strong Base Anion Resin
Alternative 3 - Reduction Coagulation and Filtration

These technologies are further discussed in the following sections. Each technology has some advantages and disadvantages in comparison to the others. For each technology, capital costs, annual O&M costs, and present worth costs were calculated. The present worth cost was calculated by using a differential interest rate of 5 percent and a 20-year period (long term cost of borrowing money minus inflation). A cost comparison is presented for these treatment technologies. Based on the costs and feasibility, one of these technologies was recommended for primary treatment. The cost evaluation was done based on treatment of a typical 1,000 gpm (1.44 MGD) well flow and a 20% well utilization rate.

4.3.1 IX using Weak Base Anion Resin

As an example, the design criteria for a two vessel weak base anion exchange resin wellhead treatment system in series was developed for a typical treatment system flow rate of 1.44 MGD (1,000 gpm). An IX system utilizing two vessels in a series configuration is the recommended treatment configuration for this example. A summary of the treatment configuration option in terms of design criteria, treatment, operations, and residuals handling is presented in Table 4.2.

Table 4.2 : Design Criteria for Weak Base Anion Resin System

Parameter	Units	Value
Assumed Treated Flow	gpm	1,000
Influent Cr-VI Level	ppb	17
No. of Treatment Vessels	–	2 (1 lead, 1 lag)
Hydraulic Loading Rate	gpm/ft^2	9.6
EBCT (each vessel)	minutes	3
Vessel Diameter	feet	10
Media Depth	feet	2.6
Run Length	BVs	100,000
Run Length	hours	5,000
Operating pH	std. units	6
CO_2 Acid Dosage	mg/L	335
Assumed Treated Water pH	std. units	8
Caustic Dosage	mg/L	21
Backwash Frequency	–	Once every month
Spent Media Disposal	–	Collect in roll-off bin and dispose of to a solid waste landfill

For a 1.44 MGD treatment facility, the design flow rate through the treatment units is 1,000 gpm with two vessels in series operation. As weak base anion resin works best at a pH range between 5.5 and 6.0, raw water pH adjustment to 6.0 using a carbon dioxide (CO_2) feed system is used. After treatment, the treated water pH is readjusted from 6.0 to 8.0 using caustic (NaOH) before discharging to the distribution system. The vessel diameter is 10.0 feet based on the system flow and hydraulic loading rate (HLR) of 9.6 gpm/ft^2. The media depth in the vessel is 2.6 feet and the EBCT in each vessel is 3 minutes. After the resin break through, the media in each vessel would be replaced. This would require taking the well out of service for approximately one week. The media in the vessels is backwashed and rinsed once every month. The backwash and rinse volume is approximately 3 BVs. Spent media is collected in a roll-off bin and disposed of in a solid waste landfill after it is confirmed non hazardous. A TCLP analysis would be performed to determine the spent media waste category (hazardous versus non hazardous). Approximately 402 cubic feet of resin would be disposed and replaced every 208 days.

4.3.1.1 WBA Spent Resin Disposal

After the resin is exhausted, the spent IX resin is removed from the vessels. Water from the resin is drained off, and then the resin is disposed of to a land fill. Once the water is drained from the resin, the resin is tested for TCLP metals. Based on the TCLP results, the spent resin would be defined as either hazardous or non-hazardous waste. Since the studies are ongoing (WRF Project

4450), disposal characteristics using TCLP or WET results are not available. For more data on the resin disposal characteristics, a pilot test with WBA resin should be conducted if a Cr-VI MCL is promulgated.

4.3.1.2 Cost Estimate

For the WBA resin IX treatment system, the following assumptions were made in developing construction and O&M costs:

1. EBCT of 3 minutes per vessel.
2. The well head pressure is sufficient and no additional booster pumps are needed.
3. 17 ppb influent Cr-VI levels and a run length of 100,000 BVs to breakthrough with pH adjustment.
4. WBA resin cost of $400 per cubic feet.
5. Power cost of $0.10/kWh.
6. Labor charges of $30 to $50 per person per hour (including overhead) depending on expertise.
7. Contingencies and allowances:
    a. 20% for contingencies.
    b. 40% for piping, instrumentation and controls, and electrical allowance.
    c. 15% for design and construction management services.
    d. 8.5% for taxes, insurance, and bonding.

Based on the above design criteria, the estimated capital and annual O&M costs for a WBA IX system with a flow rate of 1,000 gpm and an average well utilization rate of 20% were calculated at $2.3 million and $235,000, respectively. The 20-year present worth cost was calculated at $5.2 million. A breakdown of the capital and annual O&M costs is presented in Table 4.3.

4.3.2 IX using Strong Base Anion Resin

The design criteria for a strong base anion exchange resin wellhead treatment system was developed for a system flow rate of 1.44 MGD. An IX system utilizing two vessels in series is the recommended treatment configuration for this typical system. A summary of the treatment configuration option in terms of design criteria, treatment, operations, and residuals handling is presented in Table 4.4.

For a 1.44 MGD treatment facility, the design flow rate through the treatment units is 1,000 gpm, with two vessels in series operation. Adjusting the raw water pH is not necessary as the pH is at or below 8.0. The vessel diameter is 10.0 feet, based on the system flow and a HLR of 9.6 gpm/ft^2. The resin media depth in the vessel is 2.6 feet, and the EBCT in each vessel is 3 minutes. After the resin breaks through, the resin in the vessel is regenerated using sodium chloride (brine). Regeneration is performed every 300 hours of operating time. The resin is backwashed, regenerated and rinsed. The regeneration, backwash, and rinse volume is approximately 14,000 gallons (9 BVs). The well would be out of service for a few hours during regeneration. Spent brine would be collected in a tank and reused for another regeneration cycle before being disposed of as a hazardous waste or treated to remove accumulated chromium in the waste brine stream.

Table 4.3 : WBA IX System Capital and Annual O&M Costs

Capital Cost

Estimated WBA IX Treatment System Cost	$1,102,200
I&C, Electrical, and Yard Piping Allowance (40%)	$440,900
Sub Total 1	$1,543,100
Contingency (20%)	$308,620
Sub Total 2	$1,851,700
Taxes, Insurance, & Bonding (8.5%)	$157,400
Sub Total 3	$2,009,100
Design and CM Fee (15%)	$301,400
Capital Cost	**$2,310,500**

Annual O&M Cost (at 20% Well Utilization Rate)

Annual Power Cost, $/yr	$400
pH Adjustment Facilities Cost, $/yr	$23,200
Annualized Resin Replacement Cost, $/yr	$56,200
Annual Resin Disposal Cost, $/yr	$50,000
Total Estimated Labor Cost, $/yr	$83,200
Equipment Maintenance Cost, $/yr	$22,000
Annual O&M Cost, $/yr	**$235,000**

20-year Present Worth Cost	**$5,239,000**

Table 4.4 : Design Criteria for Strong Base Anion Resin System

Parameter	Units	Value
Treated Flow	gpm	1,000
Influent Cr-VI Level	ppb	17
No. of Treatment Vessels	–	2 in series
Hydraulic Loading Rate	gpm/ft2	9.6
EBCT (each vessel)	minutes	3
Vessel Diameter	feet	10
Media Depth	feet	2.6
Run Length	BVs	6,000
Operating Pressure	psi	20-30
Run Length	hours	300
Backwash Flow	BVs	1
Backwash Duration	minutes	5
Regeneration Flow	BVs	2.2
Regeneration Duration	minutes	42
Slow Rinse Flow	BVs	1
Slow Rinse Duration	minutes	20
Fast Rinse Flow	BVs	4
Fast Rinse Duration	minutes	10
Spent Brine Disposal	–	hazardous waste treatment or disposal

4.3.2.1 Residuals Handling

The spent backwash, slow rinse effluent, and fast rinse effluent from an IX facility can be equalized and sent to the sewer. The spent brine is required to pass the TCLP test to be classified as a non-hazardous waste. The residuals from an IX system only contains dissolved constituents (no suspended matter). Therefore, to classify residuals as a non hazardous waste, the concentration of the dissolved constituents needs to be below the RCRA requirements. During this study, the characterization of brine with dissolved constituents was estimated and is presented in Table 4.5. The table shows the anticipated concentrations of total chromium, nitrate, arsenic, and TDS in the spent brine. On the basis of arsenic and total chromium concentrations, the spent brine appears to be hazardous and will be disposed of accordingly (particularly since treatment testing conducted under this study indicated that chromium was difficult to remove in the spent brine). This represents a significant operational concern given the chromium issues that have been experienced at the Garden Lake facility.

Table 4.5 : IX with SBA Resin - Spent Brine Characteristics

Parameters	Arsenic mg/L	Nitrate mg/L	Total Chromium mg/L	TDS mg/L
IX with SBA Resin - Spent Brine Characteristics	23	43,636	93	545,455
RCRA TCLP Limits	5	NA	5	NA

NA - Not Applicable
RCRA - Resource Conservation Recovery Act

4.3.2.2 Cost Estimate

For the SBA resin IX treatment system, the following assumptions were made in developing construction and O&M costs:

1. EBCT of 3 minutes per vessel.
2. The well head pressure is sufficient and no additional booster pumps are needed.
3. 17 ppb influent Cr-VI levels and a run length of 6,000 BVs to breakthrough without pH adjustment.
4. Resin cost for SBA are $300 per cubic feet.
5. Power costs of $0.10/kWh.
6. Labor charges of $30 to $50 per person per hour depending on expertise.
7. Contingencies and allowances:
    a. 20% for contingencies.
    b. 40% for piping, I&C, & electrical allowance.
    c. 15% for design and construction management services.
    d. 8.5% for taxes, insurance, and bonding.
8. Hazardous waste disposal costs of $2/gallon.

Based on the above design criteria, the estimated capital and annual O&M costs for a strong base anion resin IX system with a flow rate of 1,000 gpm and an average well utilization rate of 20% are $2.3 million and $292,900, respectively. The 20-year present worth cost was calculated at $5.9 million. A breakdown of the capital and annual O&M costs is presented in Tables 4.6.

4.3.3 Reduction Coagulation and Filtration System

The reduction coagulation and filtration (RCF) process involves a pressurized granular media filtration process with pretreatment. Pretreatment includes reducing Cr-VI to Cr-III using ferrous sulfate, and oxidizing the residual ferrous iron to form ferric floc. The ferric floc can then be filtered out using a filtration media. Addition of ferrous sulfate to the raw water is followed by rapid mixing. An optimum ferrous sulfate to Cr-VI dose ratio of 50:1 is considered for the following example. Water from the reduction chamber is sent to an oxidation chamber to oxidize ferrous iron residual. The coagulant water is passed through an anthracite filter. Cr-III is precipitated along with iron particles and is subsequently removed by granular media (sand/anthracite). The media must be backwashed periodically to remove particulates that have accumulated on the filtration media. On-site backwash water treatment includes a backwash settling basin and a thickener. Solid, non-hazardous residuals generated will be disposed off-site at a solid waste landfill. Ferrous sulfate, chlorine, and polymer storage and feed systems are required.

Assuming a raw water pH of 8.1, it is recommended to adjust pH before the injection of chlorine and ferrous sulfate. Carbon dioxide would be used to adjust pH from 8.1 to 6.0. After treatment, the treated water pH would be readjusted from 6.0 to an assumed pH of 8.0 using caustic soda (NaOH).

The design criteria for a full stream RCF treatment system using a granular media filtration vessel was developed for a system flow rate of 1.44 MGD. A summary of the treatment configuration option in terms of design criteria, treatment, operations, and residuals handling is presented in Table 4.7.

Table 4.6 : SBA IX System Capital and Annual O&M Costs

Capital Cost

Estimated SBA IX Treatment Cost	$1,096,000
I&C, Electrical, and Yard Piping Allowance (40%)	$438,400
Sub Total 1	$1,534,400
Contingency (20%)	$306,900
Sub Total 2	$1,841,300
Taxes, Insurance, & Bonding (8.5%)	$156,500
Sub Total 3	$1,997,800
Design and CM Fee (15%)	$299,700
Total Estimated SBA IX Facility Cost	**$2,297,500**

Annual O&M Cost (at 20% Well Utilization Rate)

Annual Power Cost, $/yr	$2,600
Annualized Resin Replacement Cost, $/yr	$12,100
Brine Disposal Cost, $/yr	$154,200
Annual Salt Cost, $/yr	$2,700
Salt Delivery Fee, $/yr	$700
Total Estimated Labor Cost, $/yr	$83,200
Equipment Maintenance Cost, $/yr	$37,400
Annual O&M Cost, $/yr	**$292,900**

20-year Present Worth Cost	**$5,947,000**

Table 4.7 : Design Criteria for Reduction Coagulation and Filtration System

Parameter	Units	Value
Treated Flow	gpm	1,000
Influent Cr-VI Level	ppb	17
Assumed Influent Water pH	std. units	8.1
No. of Filter Vessels	–	1
Hydraulic Loading Rate	gpm/ft2	4
Reduction Contact Time	min	10
Oxidation Contact Time	min	5
Filter Diameter	feet	12
Filter media Depth	feet	2.5
Operating Pressure	psi	20-30
Operating pH	std. units	6
Mixing Criteria	sec-1	G = 1000
CO_2 Acid Dosage	mg/L	335
Ferrous Sulfate Dose	mg/L	5
Chlorine Dosage	mg/L	1
Polymer Dosage	mg/L	3
Assumed Treated Water pH	std. units	8
Caustic Dosage	mg/L	21
Thickened Sludge (% solids)	%	1.5
Thickened Sludge Disposal	–	WRF or Solid Waste Landfill
Filter Run Length	hours	16-24

4.3.3.1 Residuals Handling

Spent filter backwash from the RCF system would be sent to a backwash holding tank followed by a plate settler. Decant water from the plate settler would be recycled to the front end of the treatment plant. The sludge from the bottom of the plate settler would be hauled to the City's Water Reclamation Facility (WRF) or to a non-hazardous liquid waste disposal facility. Sewer discharge of the sludge is not feasible since the chromium level in the sludge would exceed the local limit of 1.2 mg/L.

4.3.3.2 Cost Estimate

For the RCF treatment alternative, the following assumptions were made in developing the construction and O&M costs:

1. A ferrous sulfate ($FeSO_4$) dosage of 5 mg/L, sufficient to treat up to 17 ppb influent Cr-VI.
2. Carbon dioxide dose of 335 mg/L for pH reduction to 6.0 and caustic soda dose of 21 mg/L for pH readjustment to 8.0.
3. The well head pressure is sufficient and no additional booster pumps are needed.
4. "G" value of 1000 sec^{-1} for rapid mixing.
5. 30" deep anthracite filters with a loading rate of 4 gpm/ft^2.
6. 1.5% thickened solids residuals.
7. Power costs of $0.10/kWh.
8. Labor charges of $30 to $50 per person per hour depending on expertise.
9. Contingencies and allowances:
   a. 20% for contingencies.

b. 40% for piping, I&C, & electrical allowance.
c. 15% for design and construction management services.
d. 8.5% for taxes, insurance, and bonding.

Based on the above design criteria, the estimated capital and annual O&M costs for a RCF system with a flow rate of 1,000 gpm and an average well utilization rate of 20% are $3.1 million and $177,200, respectively. The 20-year present worth cost was calculated at $5.3 million. A breakdown of the capital and annual O&M costs is presented in Table 4.8.

4.3.4 Cost and Non Cost Comparison of Technologies

Three treatment alternatives for removing Cr-VI from groundwater (i.e., IX using weak base and strong base anion resins, and RCF) have been presented. Table 4.9 presents a summary of the capital, annual O&M, and the 20-year present worth values for the three treatment alternatives. As shown in the table, Alternatives 1 and 2 (IX with WBA and SBA resin) have approximately the same capital cost and are lower than for Alternative 3 (RCF). The 20-year present worth cost for Alternative 1 (IX with WBA resin) is $5.2 million and is the lowest. Further, the WBA resin process is the most practical to implement and simplest from an operational perspective.

Table 4.9 : Cost Comparison of Treatment Alternatives

Treatment Type	Alternative 1 IX using WBA Resin	Alternative 2 IX using SBA Resin	Alternative 3 RCF System
Treatment Capacity, gpm	1,000	1,000	1,000
Capital Cost	$2,310,500	$2,297,500	$3,054,400
Annual O&M Cost	$235,000	$292,900	$177,200
20-year Present Worth Cost	$5,239,000	$5,947,000	$5,262,000

4.4 RECOMMENDED TECHNOLOGY

The recommended treatment alternative is IX with WBA resin. The spent resin will likely be a non hazardous waste and can be disposed in a solid waste landfill, similar to spent iron media generated from an arsenic adsorption system. Figure 4.1 show the typical process schematic for IX with WBA. The IX WBA treatment system would consist of two vessels operating in series. When the effluent Cr-VI level in the vessel reaches 8 ppb, the resin would be replaced. The filter vessels would be backwashed in series once every month. After backwashing, the vessels would be rinsed simultaneously using the well water. After rinsing is completed, vessels would be brought back into operation.

The capital and annual O&M costs for a typical 1,000 gpm IX WBA system were calculated at $2.3 million and $235,000, respectively. The annual O&M cost was calculated at 20% well utilization rate. The capital and annual O&M costs correspond to $1.60/gpd water capacity and $2.24/1,000 gallon total water produced, respectively.

As the spent resin characteristics are not available for IX WBA technology, a pilot study is recommended once the Cr-VI regulation is drafted by the USEPA to confirm performance and compliance with the RCRA limits.

Table 4.8 : RCF System Capital and Annual O&M Costs

Capital Cost

Estimated RCF Treatment Cost	$1,457,100
I&C, Electrical, and Yard Piping Allowance (40%)	$582,800
Sub Total 1	$2,039,900
Contingency (20%)	$408,000
Sub Total 2	$2,447,900
Taxes, Insurance, & Bonding (8.5%)	$208,100
Sub Total 3	$2,656,000
Design and CM Fee (15%)	$398,400
Capital Cost	**$3,054,400**

Annual O&M Cost (at 20% Well Utilization Rate)

Annual Power Cost, $/yr	$3,500
Chemicals Cost, $/yr	$24,700
Residuals Disposal Cost, $/yr	$5,500
Total Estimated Labor Cost, $/yr	$114,400
Equipment Maintenance Cost, $/yr	$29,100
Annual O&M Cost, $/yr	**$177,200**

20-year Present Worth Cost	**$5,262,000**

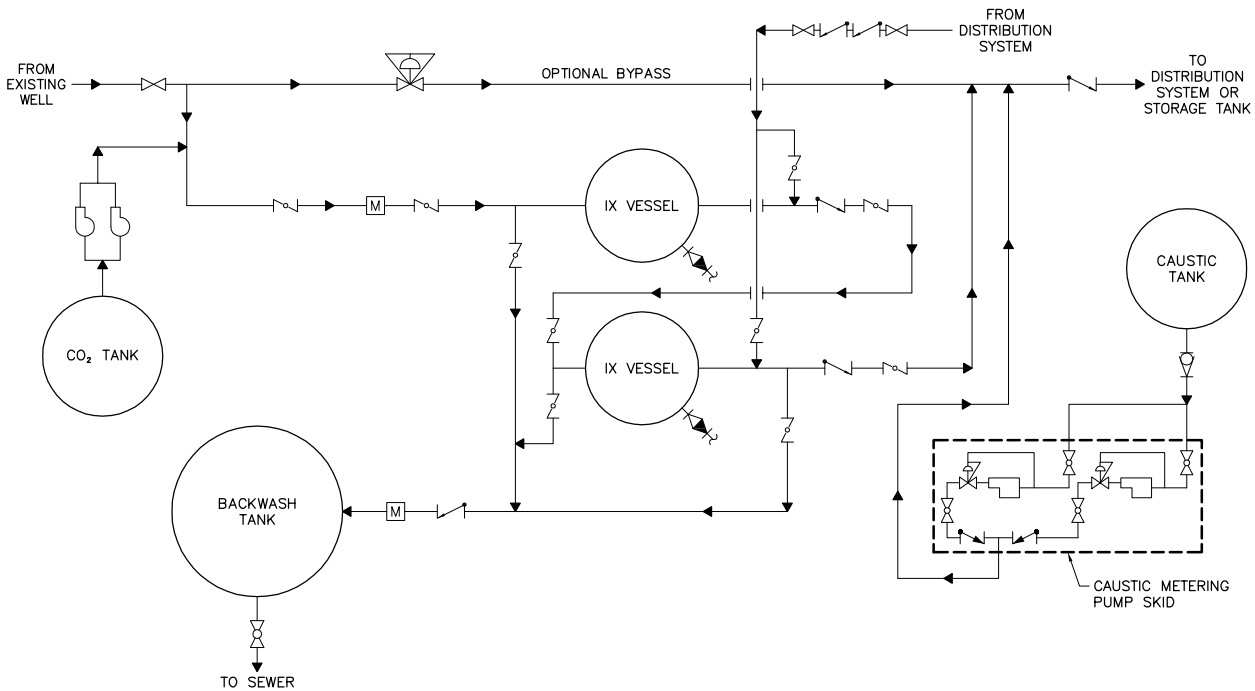

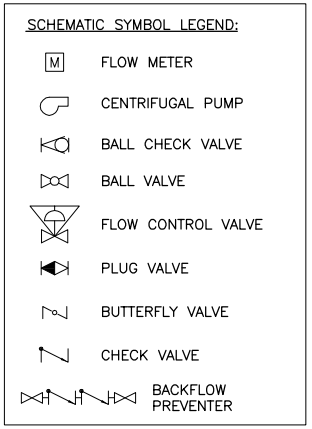

FIGURE 4.1
CHROMIUM-VI REMOVAL
IX WITH WBA RESIN - PROCESS SCHEMATIC
CITY OF AVONDALE WELLHEAD TREATMENT STUDY

NCS Engineers

Aug 28, 2013 - 2:55pm
Z:\0445 - City of Avondale - Wellhead Treatment Study\CAD\Draft Final Report\FIGURE 4.1 - ION EXCHANGE SCHEMATIC.dwg

4.5 POTENTIAL COST OF CHROMIUM-VI TREATMENT

At the May 15, 2013 workshop with City Staff, it was estimated that depending on the future MCL for Cr-VI, Wells 14, 15, 17, 24, and 26 may have a Cr-VI concern, refer to Table 4.1. The capital and annual O&M costs for a typical 1,000 gpm IX WBA system were calculated at $2.3 million and $235,000, respectively. Based on these cost estimates and knowledge of various sites, the following conclusions were drawn (as summarized in Table 4.10):

- Well 14 would require a Cr-VI treatment facility. The typical capital and annual O&M costs at an assumed 20% well utilization rate are estimated at $2.3 million and $235,000, respectively. The City would have to acquire additional land, approximately 100 feet x 80 feet, for the construction of a Cr-VI treatment facility. The cost of additional land at Well 14 is estimated at $125,000 (for a 0.5 acre parcel). Therefore, the total capital cost of the project would be $2.4 million ($2.3 million for treatment + $125,000 for land).
- There are two approaches to address the Cr-VI issue at Wells 15 and 26. If the proposed nitrate treatment at the Coldwater Booster Station (CBS) is performed using IX technology, no separate Cr-VI treatment is anticipated. It is expected the proposed IX system would reduce Cr-VI levels below the potential primary MCL. If the nitrate treatment at CBS is performed using biological treatment, blending would be a potential solution for addressing the Cr-VI issue.
- Well 17 should not require a separate Cr-VI treatment facility as the existing NTF removes a significant amount of Cr-VI from the well water. It is expected the existing NTF treated water will have a Cr-VI concentration below the potential primary MCL.
- For Well 24, there are two potential approaches to address the Cr-VI issue, one is to construct a Cr-VI treatment facility at the Well 24 site and another is to blend Well 24 water with Well 8A. If a Cr-VI treatment facility is constructed, the typical capital and annual O&M costs at an assumed 20% well utilization rate are estimated at $2.3 million and $235,000, respectively. The City would have to acquire additional land, approximately 100 feet x 100 feet, adjacent to the well site for construction of the Cr-VI treatment facility. The cost of additional land at Well 24 is estimated at $125,000 (for a 0.5 acre parcel). Therefore, the total capital cost of the project would be $2.4 million ($2.3 million for treatment + $125,000 for land. Blending would be an option if treatment capacity at Well 8A is expanded from the current 2,000 gpm to 3,000 gpm. The blended water Cr-VI level would be approximately 7.7 ppb. If blending is chosen as the preferred alternative, the City cannot utilize Well 24 when Well 8A is out of service.

Table 4.10 : Cost of Cr-VI Treatment Facilities

Well #	Associated EPDS	EPDS#	Cr-VI Level, ppb	Proposed Treatment	Total Capital Cost	Annual O&M Cost
14	Not Assigned	Not Assigned	15*	WBA IX	$2.4 million	$235,000
15	Coldwater Booster Station	5	18	CBS IX Facility or Blending		
17	Garden Lakes Water Production Facility	8	13	Existing NTF		
24	Gateway Water Production Facility	7	28	WBA IX and Blending	$2.4 million	$235,000
26	Coldwater Booster Station	5	15*	CBS IX Facility or Blending		

* Assumed Concentration.

CITY OF AVONDALE
WELLHEAD TREATMENT STUDY

FINAL REPORT

CHAPTER 5 - TREATMENT OPTIONS FOR TOTAL DISSOLVED SOLIDS

TABLE OF CONTENTS

5.0 INTRODUCTION 5-1

5.1 TDS CHEMISTRY 5-1

5.2 TDS TREATMENT TECHNOLOGY ALTERNATIVES 5-2
- 5.2.1 Treatment Alternatives Considered 5-4
- 5.2.2 TDS Treatment Alternative 1 - Electrodialysis Reversal 5-4
- 5.2.3 TDS Treatment Alternative 2 - Reverse Osmosis 5-5
- 5.2.4 TDS Treatment Alternative 3 - RO with Softening 5-6

5.3 COST AND NON - COST COMPARISON OF TDS TREATMENT TECHNOLOGIES 5-7

5.4 BRINE REDUCTION/DISPOSAL TECHNOLOGY ALTERNATIVES 5-7
- 5.4.1 Brine Treatment Alternative 1 - Evaporation Pond 5-11
- 5.4.2 Brine Treatment Alternative 2 - MVRE with Evaporation Pond 5-11
- 5.4.3 Brine Treatment Alternative 3 - Regional Sewer Disposal 5-11

5.5 COST AND NON - COST COMPARISON OF BRINE TREATMENT TECHNOLOGIES 5-12

5.6 BRINE SURVEY SUMMARY 5-12
- 5.6.1 City of Chandler 5-12
- 5.6.2 City of Goodyear 5-12
- 5.6.3 City of Tolleson 5-13
- 5.6.4 City of Scottsdale 5-13
- 5.6.5 City of Phoenix Western Canal 5-13

5.7 SUMMARY AND CONCLUSIONS 5-13

CITY OF AVONDALE
WELLHEAD TREATMENT STUDY

FINAL REPORT

CHAPTER 5 - TREATMENT OPTIONS FOR TOTAL DISSOLVED SOLIDS

LIST OF FIGURES

Figure 5.1 RO Process Schematic . . . . . After 5-7

LIST OF TABLES

Table 5.1 Well Water Quality - Spring 2013 . . . . . After 5-1

Table 5.2 TDS Treatment Technology Parameters . . . . . After 5-4

Table 5.3 EDR System Capital and Annual O&M Costs . . . . . After 5-5

Table 5.4 RO System Capital and Annual O&M Costs . . . . . After 5-6

Table 5.5 RO with Softening System Capital and Annual O&M Costs . . . . . After 5-7

Table 5.6 Cost Comparison for TDS Treatment Technologies . . . . . After 5-7

Table 5.7 Non Cost Comparison for TDS Treatment Technologies . . . . . After 5-7

Table 5.8 Evaporation Pond Capital and Annual O&M Costs . . . . . After 5-11

Table 5.9 MVRE with Evaporation Pond Capital and Annual O&M Costs . . . . . After 5-11

Table 5.10 Impact of Brine Disposal to City's Sewer System . . . . . After 5-11

Table 5.11 Regional Sewer Disposal Capital and Annual O&M Costs . . . . . After 5-12

Table 5.12 Cost Comparison for Brine Reduction Technologies . . . . . After 5-12

Table 5.13 Non Cost Comparison for Brine Reduction Technologies . . . . . After 5-12

CITY OF AVONDALE
WELLHEAD TREATMENT STUDY

FINAL REPORT

CHAPTER 5 - TREATMENT OPTIONS FOR TOTAL DISSOLVED SOLIDS

5.0 INTRODUCTION

Several wells within the City's water system have elevated levels of TDS with concentrations up to 1,500 mg/L. High TDS levels generally indicate hard water with high mineral content which can cause scale buildup in the distribution system, boilers, and bathroom fixtures. This can add to household maintenance costs for customers and the City. Although elevated TDS does not have any adverse health affects, it can result in unpleasant tastes at higher concentrations (> 1,000 mg/L). The USEPA has not established a primary MCL for TDS, however the secondary MCL for TDS is 500 mg/L. For this study, the project team established a goal of 750 mg/L for TDS in potable water.

This chapter discusses various treatment technologies which can be utilized for TDS reduction. Most of these technologies produce residual waste (termed as concentrate or brine) which may require further treatment/disposal. This chapter also discusses treatment technologies which can be utilized for brine reduction and its ultimate disposal. Both cost and non cost factors were considered when evaluating TDS and brine reduction technologies. This chapter also presents the results of a survey performed of the surrounding communities regarding their approach to addressing high TDS and brine disposal.

5.1 TDS CHEMISTRY

TDS is a measure of solids (combined content of all inorganic and organic substances) present in water which passes through a 0.45 micron filter and does not evaporate at a temperature of 103ºC. Primary sources for TDS in receiving waters are agricultural and residential runoff, leaching of contaminants through soil, point source discharges from industrial or wastewater treatment plants (WWTPs), and weathering and dissolution of rocks and soils. The most common chemical constituents which are responsible for TDS are calcium, magnesium, sodium, potassium, sulfate, alkalinity, nitrate, and chloride.

Since high TDS levels are an issue at the Del Rio Booster Station (DBS), the flow and water quality data associated with the DBS wells are used in this chapter as the basis for the selection of treatment technologies. The DBS receives water from Wells 21 and 28. The flow and water quality data from sampling conducted in Spring 2013 for these two wells are listed in Table 5.1. This table also provides flow weighted average water quality data for the combined well flow of 2,100 gallons per minute (gpm). The combined flow has a TDS level of 1,543 mg/L, total hardness level of 755 mg/L as $CaCO_3$, and a nitrate level of 9.7 mg/L. Based on this data, it was assumed that 55% of the hardness is due to calcium, and the rest is due to magnesium. Also, the temperature of the water was assumed to be 28ºC.

Table 5.1 : Well Water Quality - Spring 2013

Parameter	Unit	Primary MCL	Secondary MCL	Well 21	Well 28[i]	Combined Flow Weighted Average Water Quality
Flow Rate	gpm			1,200	900	2,100
Arsenic	ppb	10		2.2	3	2.5
Nitrate	mg/L	10		10.6	8.5	9.7
Chromium, Total	ppb	100		11	21	15.1
Chromium-VI	ppb			6	< 10	5.6[ii]
Sulfate	mg/L			172	206	186
TDS	mg/L		500	1530	1,560	1,543
Iron	mg/L		0.3	2.55	0.15	1.5
Manganese	mg/L		0.05	0.06	< 0.01	0.04[iii]
pH	Std Unit		6.5 to 8.5	7.6	8.0	7.8
Phosphorous	mg/L			< 0.05	NA	-
Vanadium	ppb			8	12	9.7
Calcium[iv & v]	mg/L			187	138	166
Magnesium[iv & v]	mg/L			93	69	82
Alkalinity as CaCO3	mg/L			148	93	124
Calcium Hardness as CaCO3[iv]	mg/L			468	345	415
Magnesium Hardness as CaCO3[iv]	mg/L			383	283	340
Hardness as CaCO3	mg/L			850	628	755
Silica	mg/L			20	18	19
DBCP	ppb	0.2		NA	< 0.02	-
Temperature[vi]	^{o}C			28	28	28

Notes:

NA: Not Available

i. Well is owned by SRP. Well 28 water quality data is average of two sampling events (10/9/08 and 9/16/10).
Flow is provided by City based on ADWR records.
Chromium-VI data is obtained from 9/16/10 sampling.

ii. For calculation purposes, it is assumed that Well 28 chromium-VI level is 5 ppb.

iii. For calculation purposes, it is assumed that Well 28 manganese level is 0.005 mg/L.

iv. For calculation purposes, it is assumed that 55% of the total hardness is due to calcium and the rest is due to magnesium.

v. Calcium and magnesium concentrations are equivalent to their respective hardness.

vi. For the purpose of RO and EDR projections, the well water temperature is assumed to be $28^{o}C$.

5.2 TDS TREATMENT TECHNOLOGY ALTERNATIVES

The most favorable treatment options to reduce TDS in groundwater are membrane treatment processes such as reverse osmosis (RO), nano-filtration (NF), electrodialysis (ED), and electrodialysis reversal (EDR). Other options include ion exchange (IX), lime softening (LS), and distillation. Each of these options is discussed below along with their advantages and disadvantages. For this study, the flow weighted average water quality data of Wells 21 and 28 was used for determining TDS reduction and performance projection of various technologies.

Reverse Osmosis - RO is a desalination technology and uses a semipermeable membrane. In RO, an applied pressure is used to overcome osmotic pressure. The result is that the solute (brine) is retained on the pressurized side of the membrane and the pure solvent (water) is allowed to pass to the other side. RO membranes can reduce 95% of TDS, hardness, arsenic, nitrate, and organic precursors to disinfection by-products with a water recovery up to 85% (15% water loss). Historically, RO membranes operated at 150 to 600 psi, however, over the last several years many advancements have occurred to improve performance of RO. Presently, RO membranes typically run at lower pressures (around 150 psi) and is a very reliable technology for municipal drinking water. An RO membrane pore size is approximately 0.10 nanometer. RO membranes are prone to scaling and fouling, and must consider carbonate, sulfate and silica control. RO technology is one of the most widely used technologies for TDS removal and was identified as a preferred alternative for further discussion. Photo 1 shows a typical RO membrane element (Source: Water Treatment Principles and Design, MWH).

Photo 1 : Typical RO Membrane

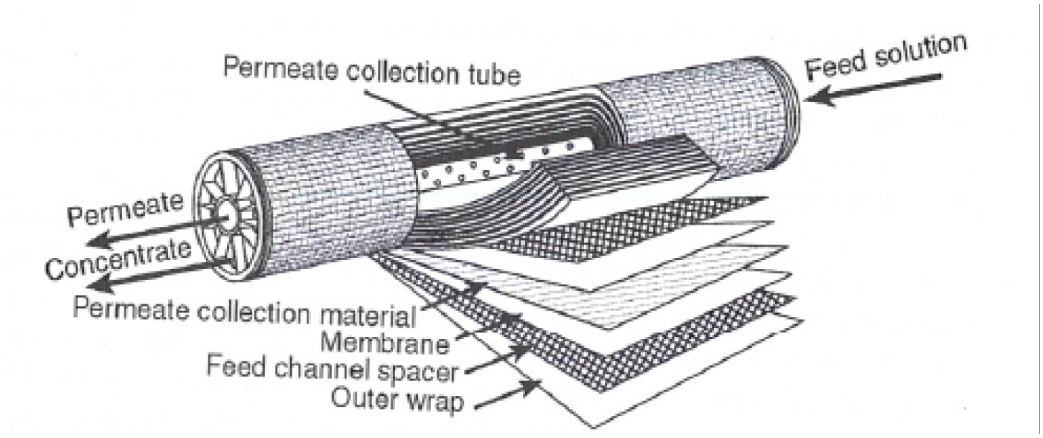

Nano-filtration - NF is a relatively recent membrane filtration process used most often for hardness removal. NF functions similarly to RO, however, it only removes divalent and larger ions (such as calcium, magnesium, etc.). Monovalent ions, such as sodium and chloride, pass through an NF membrane. The nominal pore size of the NF membrane is typically one nanometer. The transmembrane pressure required for NF is less than that required for RO (which means reduced operating cost). NF membranes are still subject to scaling and fouling, and often require antiscalant. Due to elevated sodium and chloride concentrations, NF was not further considered for the City (since the NF pore size is not small enough to remove these contaminants).

Electrodialysis - ED is an electro-membrane process in which ions are transported through ion permeable membranes from one solution to another under the influence of a potential gradient. The process uses alternating semi-permeable membranes (cation and anion membranes) in a direct current voltage potential field. The cations and anions accumulate in the reject water side of the membranes and low TDS product water is produced on the dilute side of the membranes. In the case of ED, the membranes are subject to scaling and fouling. However, EDR systems periodically reverses the polarity of the electric field to help flush scale forming ions off the membrane surface and minimize membrane cleaning. Due to this advantage, EDR is typically selected over ED. EDR can reduce TDS up to 95% with water recovery rates up to 94% (6% water loss). EDR, unlike RO, can also handle high levels of silica and total organic carbon, and is more resistant to chlorinated water. Due to several advantages, EDR technology was considered for further discussion. Photo 2 shows a typical EDR arrangement (Source: GE Osmonics).

Photo 2 : Typical EDR Arrangement

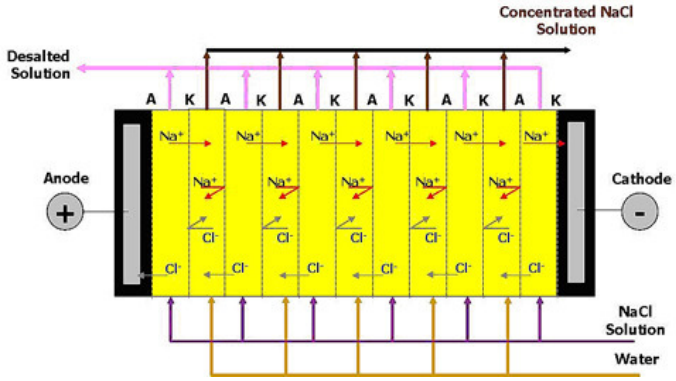

Ion Exchange - IX processes can remove inorganic contaminants, such as hardness, arsenic, uranium, sulfate and nitrate. Two types of IX systems exist: cation exchange and anion exchange. Anion exchange systems remove arsenic, uranium, nitrate and sulfate (negatively charged particles in water), while cation exchange systems remove calcium and magnesium (positively charged). IX uses synthetic resins in which a pre-saturated ion on the solid phase (the adsorbent) is exchanged for an unwanted ion in the water. In order to accomplish the exchange reaction, a packed bed of IX resin is used. The source water is continually passed through the bed in either a downflow or upflow mode until the IX bed is exhausted, as evidenced by the appearance of a contaminant ion at an unacceptable concentration in the effluent. Since IX does not reduce TDS significantly, this technology was not considered for further discussion.

Lime Softening - LS is a process of removing multivalent metallic cations (like calcium and magnesium) from hard water. There are two types of hardness, carbonate hardness (for example calcium bicarbonate, magnesium bicarbonate, etc) and non-carbonate hardness (for example calcium sulfate, magnesium sulfate, etc). Lime is used to remove carbonate hardness. However, when there is non carbonate hardness present, soda ash is added along with lime. When lime and soda ash are added, hardness-causing minerals form nearly insoluble precipitates (like calcium hydroxide and magnesium hydroxide). These precipitates are then removed by conventional processes of coagulation-flocculation, sedimentation, and filtration. During the lime softening process, for one milligram of non carbonate hardness removed, approximately one milligram of TDS is added back in some other chemical form (sodium sulfate). Therefore, softening is effective for TDS reduction

only when most of the hardness is carbonate hardness. Since both Wells 21 and 28 have most of the hardness in the form of non carbonate hardness, LS by itself may not be an effective method for TDS reduction. However, many prior studies and NCS' projects have shown that softened water improves the RO recovery and prevents fouling. Therefore, LS with RO is considered for further discussion. Photo 3 shows a typical lime softening process flow (Source: USEPA).

Photo 3 : Typical Lime Softening Process Flow

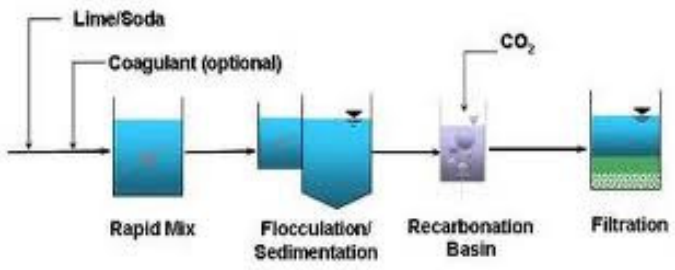

Distillation - Distillation involves boiling the water to produce water vapor. The water vapor then rises to a cooled surface where it can condense back into a liquid and be collected. Because the dissolved solids are not normally vaporized, they remain in the boiling solution. Most distillation units use either electricity or gas to generate the heat necessary. Distillation is generally not cost-effective due to its high energy consumption, therefore this technology was not considered for further discussion.

5.2.1 Treatment Alternatives Considered

Based on the discussions above, EDR, RO, and RO with softening were evaluated as potential treatment alternatives for the City. Each treatment alternative is briefly described with its estimated capital, and operation and maintenance (O&M) costs. The most feasible alternative was selected based on a comparison of cost and non cost factors. The 20-year present worth cost was calculated based on a 5% interest rate.

Based on the water quality, the EDR manufacturer projected a water recovery rate of 90% and a permeate TDS concentration of 355 mg/L. Based on EDR permeate and combined well water TDS concentrations, the amount of water needing treatment was calculated as 1,444 gpm. This would allow the City to meet a TDS goal of 750 mg/L in the potable water (refer to Table 5.2).

Based on the water quality, the projected RO water recovery rate is 80% with a RO permeate TDS concentration of 80 mg/L. Based on RO permeate and combined well water TDS concentrations, the amount of water needing treatment was calculated as 1,250 gpm. This would allow the City to meet a TDS goal of 750 mg/L in the potable water (refer to Table 5.2).

5.2.2 TDS Treatment Alternative 1 - Electrodialysis Reversal

EDR is a treatment process in which charged constituents can be removed by passing water through charged membranes. An electric current is applied to a stack of alternating anionic and cationic permeable membranes so that channels of concentrated and treated water are formed. To reduce

Table 5.2 : TDS Treatment Technology Parameters

EDR - Amount of Water to be Treated

	Flow, gpm	TDS, mg/L
Well Water	2,100	1,543
EDR Feed	1,444	1,543
EDR Permeate	1,300	355
% Water Recovery	90%	
Salt Rejection		77%
Bypass Water	656	1,543
Combined Flow	1,956	753
EDR Concentrate	144	12,235
Provide 3 EDR Skids, Each Capable of Treating	**481**	
Overall Water Recovery, %	**93%**	

RO - Amount of Water to be Treated

	Flow, gpm	TDS, mg/L
Well Water	2,100	1,543
RO Feed	1,250	1,543
RO Permeate	1,000	80
% Water Recovery	80%	
Salt Rejection		95%
Bypass Water	850	1,543
Combined Flow	1,850	752
RO Concentrate	250	7,395
Provide 3 RO Skids, Each Capable of Treating	**417**	
Overall Water Recovery, %	**88%**	

RO w/ Softening - Amount of Water to be Treated

	Flow, gpm	TDS, mg/L
Well Water	2,100	1,543
RO Feed	1,194	1,543
RO Permeate	1,075	80
% Water Recovery	90%	
Salt Rejection		95%
Bypass Water	906	1,543
Combined Flow	1,981	749
RO Concentrate	119	14,710
Provide 3 RO Skids, Each Capable of Treating	**398**	
Overall Water Recovery, %	**94%**	

fouling of membranes, the polarity is reversed. The number of stages and applied current is varied based on the desired quality of the treated water. However, the process has limitations in treating water with TDS levels above 12,000 mg/L. Some of the advantages of EDR over RO include resistance to silica fouling, resistance to chlorine, resistance to iron, and less brine volume. The main disadvantage of the EDR process is that only one manufacturer supplies the process equipment and competitive bidding is not available. It is a proprietary and sole source technology (GE Osmonics). The treatment process operates at relatively low pressure, and stacks are fabricated predominantly from corrosion-resistant material. Compared to RO, organics and microbes are not reduced by EDR. Also, EDR is sensitive to iron concentration > 0.30 mg/L, therefore iron removal is required as a pretreatment to EDR. Also, EDR works better at lower pH values, therefore acid addition is required in the EDR feed water.

To evaluate the feasibility of the EDR treatment process, the manufacturer provided equipment information and estimated equipment costs. Based on the source water quality and flow, three EDR 2020 systems are recommended with two stages and four lines. To maximize performance and prevent fouling, all three skids would be in service at full flow conditions. NCS' experience shows not to provide a redundant EDR skid as maintenance of the redundant skid becomes burdensome. It is best to operate the units daily to maintain membrane integrity at full flux rates. Both EDR and RO membranes require special attention (salt preservation, periodic flushing, and complex programming) when there is no flow through the membranes. Based on a total well flow of 2,100 gpm, only 1,444 gpm would be treated using EDR and the rest would be blended with EDR treated water. Each EDR skid would treat approximately 480 gpm of water. The EDR treated flow and brine flow from three skids would be 1,300 gpm and 144 gpm, respectively. The combined treated water (EDR treated + bypassed water) would have a TDS level of 750 mg/L. The expected brine TDS concentration is 12,235 mg/L. The EDR treatment facility would include a CO_2 system, three EDR membrane skids, a clean-in-place (CIP) system, and an equalization basin. Except for the equalization basin, all other units would be installed in a building consisting of block walls and a canopy roof. The estimated building size for the EDR system including ancillary equipment is 70 ft x 60 ft. The annual water loss at a 26% utilization rate for EDR is calculated at 19.8 million gallons (MG). The overall water recovery through the EDR system is estimated at 93%. Based on the preliminary design criteria, Table 5.3 summarizes the estimated capital and annual O&M costs. The estimated capital cost for a 2,100 gpm TDS treatment facility using EDR is $6.6 million. The estimated annual O&M cost is $250,700. The 20-year present worth cost was calculated at $9.8 million. These capital, annual O&M, and present worth costs do not include brine handling and disposal costs which are discussed subsequently in this chapter.

5.2.3 TDS Treatment Alternative 2 - Reverse Osmosis

Under this treatment alternative, low pressure RO membranes were considered. RO membranes can effectively reduce TDS, hardness, nitrate, arsenic (and other metals), organic precursors to DBPs, and individual volatile and synthetic organic chemicals. Depending on the hydraulic recovery, the concentration of salt ions and silica in the feed water can be concentrated during treatment by as much as 10 times. If ion concentrations exceed the solubility limits of the compound, potential scale-forming minerals can precipitate on the membranes causing a deterioration of productivity, decreased permeate flux, and diminished permeate quality. More important, it can cause failure of the membrane. The most common scale-forming minerals in fresh waters include calcium carbonate ($CaCO_3$), calcium sulfate ($CaSO_4$), barium sulfate ($BaSO_4$), strontium sulfate ($SrSO_4$) and silica

Table 5.3 : EDR System Capital and Annual O&M Costs

Capital Cost

EDR System Installed	$2,808,000
CO2 System Installed	$180,000
CIP System Installed	$50,000
Equalization Tank Installed	$43,200
Equipment Subtotal	$3,081,200
Piping, I&C, Electrical Allowance (40%)	$1,232,500
Canopy Structure (Building) Cost	$126,000
Sub-Total 1	$4,439,700
Contingency (20%)	$887,900
Sub-Total 2	$5,327,600
Taxes, Insurance, & Bonding (8.5%)	$452,800
Sub-Total 3	$5,780,400
Design and CM Fee (15%)	$867,100
Capital Cost	**$6,647,500**

Annual O&M Cost (at 26% Well Utilization Rate)

Annual Power cost $/yr	$19,700
Annual Chemical cost, $/yr	$42,200
Annual Membrane Replacement Cost, $/yr	$64,400
Total Estimated Labor Costs, $/yr	$93,600
Equipment Maintenance Costs, $/yr	$30,800
Annual O&M Cost, $/yr	**$250,700**

20-year Present Worth Cost	**$9,771,200**

(SiO_2). An antiscalant chemical is typically used to prevent scaling on the membranes. Furthermore, RO membrane concentrate contains naturally occurring organic matter as well as inorganic constituents, therefore conditions at the membrane surface are often near ideal to support microbial growth. Chlorination is the typical method of disinfection to control microbial growth, however most of the RO membranes are very sensitive to chlorine or oxidation. Also, RO is sensitive to iron concentration > 0.10 mg/L, therefore iron removal is required as a pretreatment to RO.

Based on the source water quality and flow, three RO skids would be provided. To maximize performance and prevent fouling, all three skids would be in service at full flow conditions. As discussed earlier, NCS' experience suggests that a redundant RO skid not be provided due to maintenance concerns. RO membranes require special attention (salt preservation, periodic flushing, and complex programming) when there is no flow through the unit. Based on a total well flow of 2,100 gpm, only 1,250 gpm would be treated using RO and the remainder would be blended with RO treated water. Each RO skid would treat approximately 420 gpm of water. The RO treated water and brine flow from three skids would be 1,000 gpm and 250 gpm, respectively. The combined treated water (RO treated + bypassed water) would have a TDS level of 750 mg/L. The expected brine TDS concentration is 7,395 mg/L. The RO treatment facility would include an antiscalant feed system, three RO membrane skids, a CIP system, and an equalization basin. Except for the equalization basin, all other units would be installed in a building consisting of block walls and a canopy roof. The estimated building size for an RO system including ancillary equipment is 65 ft x 60 ft. The annual water loss at a 26% utilization rate for RO is calculated at 34 MG. The overall water recovery rate through the RO treatment is estimated at 88%. Based on the preliminary design criteria, Table 5.4 summarizes the estimated capital and annual O&M costs. The estimated capital cost for a 2,100 gpm TDS treatment facility using RO is $3.7 million. The estimated annual O&M cost is $188,600. The 20-year present worth cost is calculated at $6.0 million. These capital, annual O&M, and present worth costs do not include brine handling and disposal costs which are discussed subsequently in this chapter.

5.2.4 TDS Treatment Alternative 3 - RO with Softening

The third TDS treatment alternative that was considered is RO with softening. In addition to removing multivalent metallic cations, the LS process can reduce concentrations of sparing solution salts and ions in water. Pretreatment by LS improves the RO water recovery to 90%. Based on water recovery, RO permeate TDS concentration, and combined well water TDS concentrations, the amount of water that needs treatment is calculated as 1,194 gpm. This would allow the City to meet a TDS goal of 750 mg/L in the potable water (refer to Table 5.2). The bypass flow rate would be 906 gpm. In this alternative, three RO skids, each capable of treating approximately 400 gpm, would be provided. The RO treated and brine flow from three skids would be 1,075 gpm and 398 gpm, respectively. The expected brine TDS concentration is 14,710 mg/L.

The RO with softening treatment facility would include a lime feed system, rapid mixer, flocculation basin, plate settler, filtration system, backwash holding tank, sludge holding tank, CO_2 system, an antiscalant feed system, three RO membrane skids, a CIP system, and an equalization basin. Except for the lime softening system and equalization basin, all other units will be installed in a building consisting of block walls and a canopy roof. The estimated building size for an RO with softening system including ancillary equipments is 75 ft x 65 ft. The annual water loss at a 26% utilization rate for RO with softening is calculated at 16 MG. The overall water recovery rate through the RO

Table 5.4 : RO System Capital and Annual O&M Costs

Capital Cost

RO System Installed	$1,512,000
Antiscalant System Installed	$28,800
CIP System Installed	$50,000
Equalization Tank Installed	$74,900
Equipment Subtotal	$1,665,700
Piping, I&C, Electrical Allowance (40%)	$666,300
Canopy Structure (Building) Cost	$117,000
Sub-Total 1	$2,449,000
Contingency (20%)	$489,800
Sub-Total 2	$2,938,800
Taxes, Insurance, & Bonding (8.5%)	$249,800
Sub-Total 3	$3,188,600
Design and CM Fee (15%)	$478,300
Capital Cost	**$3,666,900**

Annual O&M Cost (at 26% Well Utilization Rate)

Annual Power cost $/yr	$25,800
Annual Chemical cost, $/yr	$17,800
Annual Membrane Replacement cost, $/yr	$34,700
Total Estimated Labor Costs, $/yr	$93,600
Equipment Maintenance Costs, $/yr	$16,700
Annual O&M Cost, $/yr	**$188,600**

20-year Present Worth Cost	**$6,016,900**

with softening system is estimated at 94%. Based on the preliminary design criteria, Table 5.5 summarizes the estimated capital and annual O&M costs. The estimated capital cost for a 2,100 gpm TDS treatment facility using RO with softening is $5.6 million. The estimated annual O&M cost is $756,100. The 20-year present worth cost is $15.0 million. These capital, annual O&M, and present worth costs do not include brine handling and disposal costs which are discussed subsequently in this chapter.

5.3 COST AND NON-COST COMPARISON OF TDS TREATMENT TECHNOLOGIES

Table 5.6 compares the capital, annual O&M, and 20-year present worth costs for the evaluated treatment technologies. The present worth cost for the RO system is lowest followed by EDR. The present worth cost of RO system is calculated at $6.0 million compare to $9.8 million for EDR. The EDR system capital cost ($6.6 million) is 1.8 times the RO system capital cost ($3.7 million). The RO with softening system capital cost ($5.6 million) is 1.5 times the RO system capital cost. The annual O&M cost for the RO system ($188,600) is lowest followed by EDR ($250,700). The annual O&M cost for the RO with softening system ($756,100) is the highest. Based on the cost comparison, RO with softening was not further considered. Although the capital and annual O&M costs for the EDR system are higher than RO, it is important to consider pretreatment requirements for both the technologies (iron removal). The cost of a pretreatment system is discussed in Chapter 7. Based on the above cost comparison, both EDR and RO technologies will be further considered for TDS treatment. One of these technologies can be eliminated/selected based on the pretreatment requirements.

Besides cost, several non cost factors were considered for the selection of a recommended treatment technology (refer to Table 5.7). This table shows that RO with softening requires the highest footprint, is complex to operate, has additional residuals (lime sludge) to dispose, and the highest energy consumption. Therefore, this alternative is not recommended. The non cost factors associated with RO and EDR are very comparable. Both the technologies were recommended to be considered for TDS treatment. Further discussion is presented in Chapter 7 based on pretreatment requirements and additional factors.

Figure 5.1 presents the RO process schematic. The process schematic for EDR would be similar to RO except there would be a recirculation line for the concentrate streams.

5.4 BRINE REDUCTION/DISPOSAL TECHNOLOGY ALTERNATIVES

All of the TDS treatment technologies (including RO, EDR, NF, IX, LS) produce residual streams having a high concentration of dissolved solids. When selecting any of the TDS treatment technologies, it is important to consider the ultimate disposal of the residual streams and associated costs. The preferred TDS treatment technologies (EDR and RO) produce heavily concentrated brine streams. This section discusses various options for the ultimate disposal of brine. These options include surface water discharge, regional sewer disposal, deep well injection, crystallactor, evaporation pond, wind aided intensified evaporation, enhanced evaporation, multi-effect evaporator, and mechanical vapor recompression evaporator (MVRE). Each of these technologies is further discussed below.

Surface Water Discharge - Surface water discharge consists of disposal of brine to a surface water

Table 5.5 : RO with Softening System Capital and Annual O&M Costs

Capital Cost

Lime Softening System Installed	$256,000
Filtration System Installed	$401,000
Backwash Holding Tank Installed	$39,000
Sludge Holding Tank Installed	$48,000
CO2 System Installed	$180,000
RO System Installed	$1,512,000
Antiscalant System Installed	$28,800
CIP System Installed	$50,000
Equalization Tank Installed	$34,600
Equipment Subtotal	$2,549,400
Piping, I&C, Electrical Allowance (40%)	$1,019,800
Canopy Structure (Building) Cost	$146,300
Sub-Total 1	$3,715,500
Contingency (20%)	$743,100
Sub-Total 2	$4,458,600
Taxes, Insurance, & Bonding (8.5%)	$379,000
Sub-Total 3	$4,837,600
Design and CM Fee (15%)	$725,600
Capital Cost	**$5,563,200**

Annual O&M Cost (at 26% Well Utilization Rate)

Annual Power cost $/yr	$29,200
Annual Chemical cost, $/yr	$321,800
Annual Cost for Lime Sludge Disposal, $/yr	$244,400
Total Estimated Labor Costs, $/yr	$135,200
Equipment Maintenance Costs, $/yr	$25,500
Annual O&M Cost, $/yr	**$756,100**

20-year Present Worth Cost	**$14,984,200**

Table 5.6 : Cost Comparison for TDS Treatment Technologies

Treatment Alternatives	Capital Cost	Annual O&M Cost	20-year Present Worth Cost
EDR	$6,647,500	$250,700	$9,771,200
Reverse Osmosis	$3,666,900	$188,600	$6,016,900
RO with Softening	$5,563,200	$756,100	$14,984,200

Table 5.7 : Non Cost Comparison for TDS Treatment Technologies

Parameters	EDR	Reverse Osmosis	RO with Softening
TDS, Arsenic, and Nitrate Removal	Not as efficient as RO	Highest removal rates	Same as RO alone
Hardness Removal	Efficient	Efficient	Better than RO alone
Scaling/Fouling Potential	Less than RO	Scaling potential so chemical treatment is required	Less than RO alone
Residuals Quantity	Less than RO	Higher than EDR	In addition to brine from RO, there would be lime sludge from LS.
Residuals Disposal	Sewer	Sewer	Sewer
Loss of Water	10%	20%	10%
Competitive Bidding	No	Yes	Yes
Pretreatment	Iron and manganese removal	Iron and manganese removal, dechlorination	Iron and manganese removal, dechlorination
Operational Ease	Complex	Less complex than EDR	More complex than RO alone
Energy Consumption	Medium	High	Higher than RO alone
Footprint	Approximately same for RO and EDR	Approximately same for RO and EDR	Higher than RO alone
Removal of Additional Contaminants	Only charged ions	Many other contaminants can be reduced	Same as RO alone

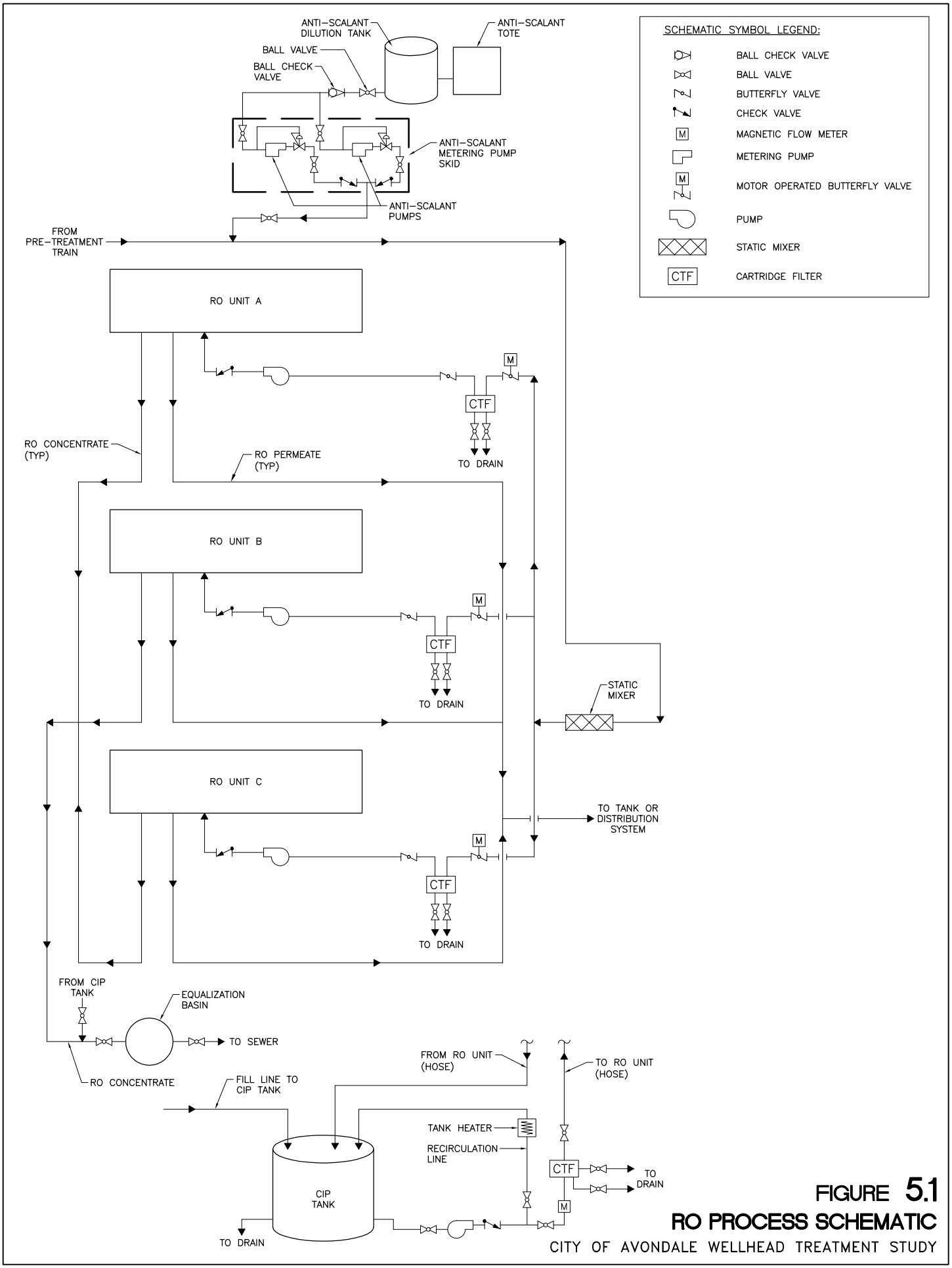

FIGURE 5.1

RO PROCESS SCHEMATIC

CITY OF AVONDALE WELLHEAD TREATMENT STUDY

NCS Engineers

Aug 28, 2013 – 2:57pm
Z:\0445 – City of Avondale – Wellhead Treatment Study\CAD\Draft Final Report\FIGURE 5.1 – RO PROCESS SCHEMATIC.dwg

body that will not be adversely affected by the process residuals. This type of disposal option exists as a stand-alone process and potentially represents a single step disposal approach. The cost associated with transporting brine may vary depending on the volume of the discharge and distance of the surface water body. In the case of the City of Avondale, this option is not viable as there is no perennial source in the vicinity. Furthermore, this option would have strict and extensive regulatory requirements and would require a significant amount of permitting work. This option probably would not be sustainable due to environmental considerations, therefore it was not further considered in this study.

Regional Sewer Disposal - Sewer disposal is an economical and simple option in terms of equipment required to dispose of brine. Disposal to the sewer involves conveyance to the sewer and sometimes a negotiated fee payable to the sewer system operator. Disposal of brine to the sewer, however, increases salinity in WWTP effluent. A large WWTP may be able to handle an increase of TDS because of the dilution factor associated with the large volume of sewage being treated. Smaller WWTPs are not as capable of handling a new source of high TDS, especially if the effluent will be used for irrigation of salt sensitive crops. At present, the City's 100 year water plan discourages raising the TDS at the City's water reclamation facility (WRF). However, the City would like to participate in the development of regional sewer line project with the City of Goodyear and the City of Tolleson to transport their reclaimed wastewater to the Palo Verde Nuclear Generating Station (PVNGS). Otherwise, sewer disposal is not anticipated to be a feasible alternative.

Deep Well Injection - Under this alternative, the brine is injected into a deep geologic formation, which in theory has the ability to contain, isolate, and prevent movement of the brine into a drinking water aquifer. Pumps are used above ground to inject the brine. The flow and pressure requirements are site specific. Depending on specific characteristics of the receiving aquifer and the brine, pH adjustment may be necessary to minimize scale formation. Deep well injection is a marginally effective method of disposal. The cost, regulatory requirements, local conditions, and geology need to be considered prior to implementation. Fouling and scaling of the injection well or receiving formation can cause problems. The receiving formation must have sufficient permeability so that the injected flow does not excessively raise the pressure and fracture the injection zone. As this option requires extensive study of the local geography and at present there is no such information available, this option was not considered for further discussion. Also, an aquifer protection permit can not be obtained for this option.

Crystallactor - The Crystallactor is a high rate process compared to conventional lime softening in which lime and/or sodium hydroxide are added in a fluidized reactor in which sand acts as a nuclei for the reaction. In a crystallactor, brine is pumped in an upward direction maintaining the seed material in a fluidized state. The crystal pellets form around the seed material. The pellets grow and move towards the reactor bottom. Periodically, the pellets are discharged from the reactor and fresh seed material is added. Simple atmospheric drying produces readily handled and virtually water-free, pure pellets. These pellets may be reused for beneficial uses instead of disposal in a landfill. The softening chemistry of the crystallactor is similar to the conventional softening process. A Crystallactor could be used as a brine stabilization process followed by high pressure RO (HPRO). According to a recent AWWARF study, this technology does not perform well, therefore it was not considered for further evaluation.

Evaporation Pond - Brine from membrane processes can be disposed of in an evaporation pond for volume reduction. This brine management strategy requires building evaporation ponds of a depth and surface area large enough to accommodate maximum volume of brine, plus capacity for storm water, and precipitated salts. Optimal depth is between 1 - 60 inches. Ponds may require impervious liners of clay and/or PVC to prevent saline water from filtering into the groundwater system. For the City, evaporation ponds may work well because of the hot climate. The estimated net annual evaporation rate for the Phoenix area is approximately 42 inches per year. The advantages of evaporation ponds are that they are easy to construct, require low maintenance, have no mechanical equipment (except pumps to deliver the brine), and for small flows are rather inexpensive. The disadvantages are that they require large tracts of land when the volume of concentrate is high and impervious liners which can be expensive. The costs associated with evaporation pond construction are highly site specific, and mostly driven by the cost of land and the cost of liners that are needed to protect the aquifers beneath the ponds. Approvals and permits from local and state regulatory agencies would be required. The ideal location for the construction of evaporation ponds would be places with relatively small flow rates, flat terrain, inexpensive land, high evaporation rates, and low rainfall. Maintenance for the evaporation pond includes monitoring the integrity of the liners and water quality of the aquifer below the ponds. Once the bulk of the brine has been evaporated, the dried salts would eventually be hauled to an approved disposal site. Evaporation ponds may be a feasible option and were considered for further evaluation.

Wind Aided Intensified Evaporation - Wind aided intensified evaporation (WAIV) can act as a part of the brine disposal process. It is relatively a new technology that is used in conjunction with evaporation ponds to reduce the overall surface area of the ponds. WAIV uses wind to promote evaporation against a larger surface area. WAIV has shown to decrease the size of evaporation ponds by as much as 10 fold. Low humidity and high air temperatures increase reliability of this treatment technology. The WAIV unit is a vertical support structure that suspends a series of cloth sheets. Brine is pumped from a pond to the top of the WAIV unit where the brine trickles down the cloth sheets. As dry air passes over the vertical cloth surfaces, evaporation takes place and the salts are deposited on the cloth sheets. Any excess liquid is drained back to the pond, while the salts deposited are knocked off by the wind action and caught in a trough below the fabric for disposal in a landfill. The evaporation pond requires the same components as described above and includes excavation, liners, and monitoring wells. Other items associated with the WAIV unit include a vertical structure for cloth sheets, piping, pumps, and electrical equipment. The WAIV unit maintenance includes lubrication of pumps, electrical equipment maintenance, periodic cleaning, and hauling/disposing of crystallized salts. Air quality permitting may be required for WAIV technology due to over spray from the facility. Due to the extensive maintenance required by the WAIV technology, it was not considered as a feasible option.

Enhanced Evaporation - Enhanced evaporation is a process used in conjunction with an evaporation pond. The process was developed to reduce the overall surface area of the ponds. The process uses mechanical misting equipment known as the Turbo-Mister evaporator to spray the concentrate into the atmosphere in the form of tiny droplets. This action substantially increases the evaporation rate of the concentrate. The process depends highly on the atmospheric conditions such as temperature, humidity, etc. Enhanced evaporation results in evaporating a large amount of water, leaving only precipitated salts. Disadvantages of this option include negative impacts on the aesthetic conditions of the surrounding area, additional equipment needed, etc. Issues may be created by high intensity of wind, which results in spreading of misted concentrate in all directions.

Due to high equipment maintenance, this option was not considered feasible.

Multi-Effect Evaporator - A multi-effect evaporator can be used as a part of the final solidification process of brine. In a multi-effect evaporator, brine is boiled in a sequence of vessels, each held at a lower pressure than the last. Because the boiling point decreases as pressure decreases, the vapor boiled off in one vessel can be used to heat the next, and only the first vessel (at the highest pressure) requires an external source of heat. The number of effects is the number of times the latent heat is used for evaporation before it is removed from the system. Regardless of the number of effects, there is always a limiting overall temperature difference. From a practical standpoint, the number of effects is limited to about eight. It is unusual to see multi-effect evaporators with more than six effects. This option was not considered feasible due to very high energy costs associated with it.

MVRE - MVRE can be used as a part of the final solidification process of brine. In MVRE, vapor from an evaporator is compressed (with a positive-displacement, centrifugal or axial-flow compressor) to a higher pressure so that it can be condensed in the evaporator heat exchanger. A brine evaporator using the MVRE principle concentrates saline water well beyond its normal saturation point. The ultimate concentration achievable in the MVRE is limited by (a) boiling point elevation of the brine, (b) relative concentrations of sulfate and chloride, and (c) the solubility of sodium salts. The power requirement for MVRE is estimated around 85-90 kWh/1,000 gallons of treated brine. MVRE is more energy efficient than an evaporator or distillation process. The process produces low TDS product water and a very concentrated brine solution (up to 200,000 mg/L of TDS). This technology may be a viable option for brine reduction. The MVRE brine solution can further be treated using evaporation pond, spray drying, or crystallization.

- **Spray drying** is an almost instantaneous means of producing dry product from a solution or slurry. This is accomplished by reducing the liquid to a fine spray, mixing it with a stream of hot gas, and then separating the dried powder from the gas. The gas supplies the heat for the evaporation and carries off the moisture. Although this step is somewhat energy intensive, it normally treats very low volume streams and produces a "bone dry solid" that is easy to dispose of in a landfill. Due to high energy cost associated with this technology, it is not considered as a viable option.

- **Crystallization** is a process that acts as a part of the final solidification step. This process isolates only one compound as a solid from a brine stream. The technology has been used to further reduce the volume of residuals from a MVRE unit or evaporator. Fractional crystallization can produce relatively "impure" salts for possible reuse. The principle of operation involves repetitive partial solidification and remelting of a melt in which the solids are deposited on the heat transfer surface. The temperature employed during the solidification stage favors the deposition of the desired fraction. At the final stage, two types of salts (product and residue) are formed. The composition of the brine determines the non-routine maintenance of the crystallization system. The routine maintenance includes cleaning/purging the crystallizer body and discharge port/piping. Due to high energy cost associated with the crystallization system, it is not considered as a viable option.

Based on the discussions above, evaporation ponds, MVRE with evaporation ponds, and regional sewer disposal technologies were further evaluated as the potential brine handling and disposal alternatives. Each treatment alternative is briefly described below along with the estimated capital

and annual O&M costs. The most feasible alternative is selected based on a comparison of cost and non cost factors.

5.4.1 Brine Treatment Alternative 1 - Evaporation Pond

Assuming RO is the preferred treatment alternative at the DBS (Wells 21 and 28), the amount of brine generated at a 26% utilization rate would be 34 MG/yr. Table 5.8 presents the capital cost for the construction of an evaporation pond for the disposal of 34 MG of brine per year. This cost does not include cost of land acquisition. Table 5.8 shows the amount of land required for the disposal of brine is 26 acres. The capital cost of brine disposal using evaporation ponds is estimated at $8.9 million which corresponds to $3.34 per gallon per day (gpd) of water capacity added. The annual O&M cost associated with the evaporation pond is estimated at $215,300 which corresponds to $0.85/1,000 gallon of treated water produced.

5.4.2 Brine Treatment Alternative 2 - MVRE with Evaporation Pond

MVRE reduces the RO/EDR brine volume by a factor of 10 to 30 depending on site specific conditions. Assuming RO as the preferred treatment alternative at DBS, the amount of brine generated at a 26% utilization rate would be 34 MG/yr. Using MVRE, the volume of brine can be reduced to 1.7 MG/yr at a utilization rate of 26%. As MVRE is not an ultimate disposal method, evaporation ponds need to be constructed for the reduced volume of brine. Table 5.9 presents the capital cost for the construction of MVRE (not including land costs). Table 5.9 shows the capital cost of brine disposal using MVRE with evaporation ponds is estimated at $11.2 million which corresponds to $4.21 per gpd water capacity. The annual O&M cost of brine disposal is estimated at $3.24/1,000 gallon of treated water produced.

5.4.3 Brine Treatment Alternative 3 - Regional Sewer Disposal

Table 5.10 presents the potential impact of brine disposal to the City's sewer system. Based on the data provide by the City, it was determined the average wastewater flow rate at the City's WRF is 5.6 MGD with a TDS concentration of 1,000 mg/L. For all three TDS treatment alternatives, the impact of brine disposal to the sewer was calculated at full well flow conditions (100% utilization rate) and at a 26% utilization rate. Table 5.10 shows that if EDR is used for TDS treatment at DBS, the wastewater TDS concentration would increase to 1,110 mg/L and 1,412 mg/L at 26% and 100% utilization rates, respectively. Similarly, if RO is used for TDS treatment at DBS, the wastewater TDS concentration would increase to 1,107 mg/L and 1,393 mg/L at 26% and 100% utilization rates, respectively. And, if RO with softening is used for TDS treatment at DBS, the wastewater TDS concentration would increase to 1,109 mg/L and 1,409 mg/L at 26% and 100% utilization rates, respectively. The increase in flow will vary from 38 to 250 gpm depending on the TDS treatment alternatives and utilization rates. The capital cost element associated with sewer disposal mainly consists of piping installation from the water treatment facility to the nearest manhole. The annual O&M costs mainly consist of treatment costs of the added flow at the City's WRF. Sewer disposal can be a viable option as long as increased TDS level is maintained below 1,200 mg/L on average, as at this TDS level, reclaimed water can still be used for irrigation and other purposes. However at present, the City's 100 year water plan discourages raising the TDS at the City's WRF. Therefore, brine disposal to the City's sewer system is not considered viable. Presently, the City is considering participation in a regional wastewater facility which would allow the City to discharge brine into the regional sewer system and not increase TDS concentration in the City's wastewater stream.

Table 5.8 : Evaporation Pond Capital and Annual O&M Costs

Capital Cost

Brine Flow Rate with RO for TDS Treatment, gpm	250
Amount of Brine Generated at 100% Utilization Rate, gallons/year	131,400,000
Utilization Rate, %	26%
Total Amount of Brine Generated at given Utilization Rate, gal/yr	34,164,000
Amount of Brine Generated at given Utilization Rate, cf/yr	4,567,380
Depth of the Evaporation Pond (including 1 ft free board), ft	5
Land Area Required for Evaporation Pond, acres	26
Assuming One Square Evaporation Pond, ft x ft	1069 x 1069
Unit Excavation Cost, $/cy	$3
Total Cost of Excavation, $	$792,900
Unit Liner Cost, $/sf	$4
Total Cost of Lining, $	$4,652,900
Piping, I&C, Electrical Allowance, $	$500,000
Sub-Total 1	$5,945,800
Contingency (20%)	$1,189,200
Sub-Total 2	$7,135,000
Taxes, Insurance, & Bonding (8.5%)	$606,500
Sub-Total 3	$7,741,500
Design and CM Fee (15%)	$1,161,200
Capital Cost	**$8,902,700**
Capital Cost of Brine Disposal, $/gpd Water Capacity	**$3.34**

Annual O&M Cost (at 26% Well Utilization Rate)

Annual Power cost $/yr	$1,400
Sludge Disposal Cost, $/yr	$136,900
Total Estimated Labor Costs, $/yr	$52,000
Equipment Maintenance Costs, $/yr	$25,000
Annual O&M Cost, $/yr	**$215,300**
Annual O&M Cost of Brine Disposal, $/1,000 gallon Treated Water Produced	**$0.85**

Table 5.9 : MVRE with Evaporation Pond Capital and Annual O&M Costs

Capital Cost

Brine Flow Rate with RO for TDS Treatment, gpm	250
Amount of Brine Generated at 100% Utilization Rate, gallons/year	131,400,000
Utilization Rate, %	26%
Total Amount of Brine Generated at given Utilization Rate, gal/yr	34,164,000
Amount of Brine Generated at given Utilization Rate, MGD	0.09
Estimated Construction Costs for 0.09 MGD Brine Facility	$3,937,000
Piping, I&C, Electrical Allowance (40%)	$1,574,800
Sub-Total 1	$5,511,800
Contingency (20%)	$1,102,400
Sub-Total 2	$6,614,200
Taxes, Insurance, & Bonding (8.5%)	$562,200
Sub-Total 3	$7,176,400
Design and CM Fee (15%)	$1,076,500
MVRE Capital Cost, $	$8,252,900
Evaporation Pond Capital Cost (for brine generated from MVRE), $	$2,967,600
Capital Cost	**$11,220,500**
Capital Cost of Brine Disposal, $/gpd Water Capacity	**$4.21**

Annual O&M Cost (at 26% Well Utilization Rate)

Average Brine Flow at given Utilization Rate, MGD	0.09
Estimated Annual O&M Cost	$603,300
Annual O&M Cost of Brine Disposal (MVRE Alone), $/1000 gallon of Treated Water Produced	$2.39
Annual O&M Cost of Brine Disposal (for Evaporation Pond), $/1000 gallon of Treated Water Produced	$0.85
Annual O&M Cost, $/1,000 gallon of Treated Water Produced	**$3.24**

Note

1. The capital and annual O&M costs are developed based on NCS experience with similar projects using unit costs.

Table 5.10 : Impact of Brine Disposal to City's Sewer System

Solids Loading on Sewer at 26% Utilization Rate

Sewer Flow Rate[i]	5.6	MGD
Sewer TDS Concentration[ii]	1,000	mg/L
Daily Solids Loading Rate	**46,704**	**lbs/day**
Brine Flow Rate at 26% Utilization	38	gpm
Brine Concentration	12,500	mg/L
Daily Solids Added	**5,641**	**lbs/day**
Weighted Average TDS Concentration	**1,110**	**mg/L**

Solids Loading on Sewer at 100% Utilization Rate

Sewer Flow Rate[i]	5.6	MGD
Sewer TDS Concentration[ii]	1,000	mg/L
Daily Solids Loading Rate	**46,704**	**lbs/day**
Brine Flow Rate at 100% Utilization	144	gpm
Brine Concentration	12,500	mg/L
Daily Solids Added	**21,698**	**lbs/day**
Weighted Average TDS Concentration	**1,412**	**mg/L**

Sewer Flow Rate[i]	5.6	MGD
Sewer TDS Concentration[ii]	1,000	mg/L
Daily Solids Loading Rate	**46,704**	**lbs/day**
Brine Flow Rate at 26% Utilization	65	gpm
Brine Concentration	7,500	mg/L
Daily Solids Added	**5,858**	**lbs/day**
Weighted Average TDS Concentration	**1,107**	**mg/L**

Sewer Flow Rate[i]	5.6	MGD
Sewer TDS Concentration[ii]	1,000	mg/L
Daily Solids Loading Rate	**46,704**	**lbs/day**
Brine Flow Rate at 100% Utilization	250	gpm
Brine Concentration	7,500	mg/L
Daily Solids Added	**22,532**	**lbs/day**
Weighted Average TDS Concentration	**1,393**	**mg/L**

Sewer Flow Rate[i]	5.6	MGD
Sewer TDS Concentration[ii]	1,000	mg/L
Daily Solids Loading Rate	**46,704**	**lbs/day**
Brine Flow Rate at 26% Utilization	31	gpm
Brine Concentration	14,700	mg/L
Daily Solids Added	**5,486**	**lbs/day**
Weighted Average TDS Concentration	**1,109**	**mg/L**

Sewer Flow Rate[i]	5.6	MGD
Sewer TDS Concentration[ii]	1,000	mg/L
Daily Solids Loading Rate	**46,704**	**lbs/day**
Brine Flow Rate at 100% Utilization	119	gpm
Brine Concentration	14,700	mg/L
Daily Solids Added	**21,100**	**lbs/day**
Weighted Average TDS Concentration	**1,409**	**mg/L**

i. Sewer flow rate is determined from 2013 monthly DMRs provided by the City.
ii. TDS concentration is determined from 2012 quarterly DMRs provided by the City.

Table 5.11 shows the capital cost of brine disposal to the regional sewer is estimated at $178,100 which corresponds to $0.07 per gpd water capacity. The annual O&M cost of brine disposal is estimated at $0.28/1,000 gallon of water produced.

5.5 COST AND NON COST COMPARISON OF BRINE TREATMENT TECHNOLOGIES

Table 5.12 compares the capital and annual O&M costs for the preferred technologies. The table shows the capital costs for evaporation pond and MVRE with evaporation pond are $3.34 and $4.21 per gpd water capacity, respectively. However, the capital cost associated with regional sewer disposal is only $0.07 per gpd water capacity. This table also shows the annual O&M costs for evaporation pond and MVRE with evaporation are $0.85 and $3.24 per 1,000 gallon of treated water produced, respectively. However, the annual O&M cost associated with regional sewer disposal is only $0.28/1,000 gallon of treated water produced. Therefore, regional sewer disposal is the most economical alternative.

Besides cost, several non cost factors including operation ease, foot print requirement, and energy consumption are considered for the selection of the recommended technology, refer to Table 5.13. Out of three short listed alternatives, regional sewer disposal appears to be the most viable option due to less operational complexity, and no foot print and energy requirements.

5.6 BRINE SURVEY SUMMARY

As part of the TDS treatment options evaluation, a questionnaire was sent to several Phoenix area municipalities that treat TDS. The purpose of the survey was to inventory how other facilities in the Valley are treating TDS and handling the waste brine. Based on NCS' knowledge and responses received from the municipalities, a brief summary of the TDS facilities is presented below:

5.6.1 City of Chandler

The City of Chandler operates a 1.25 MGD RO facility which treats industrial wastewater coming from Intel's FAB 12, FAB 22, and FAB 32 facilities to drinking water standards. The treated water is recharged back into the groundwater aquifer through injection wells. The brine from the RO facility is sent to evaporation ponds. After the facility was upgraded in recent years, the brine is first passed through a HPRO and MVRE units before sending to the evaporation ponds.

5.6.2 City of Goodyear

The City of Goodyear operates a 3.5 MGD RO facility to meet its potable water needs. The RO inlet water TDS concentration is approximately 1,500 mg/L. Partial stream RO treatment is utilized. The TDS concentration in the combined treated water is 750 mg/L. The RO recovery rate is approximately 83% with a brine concentration of 7,000 mg/L. The brine is disposed of to the sewer through a DeMinimus Permit. The construction cost for the RO facility was $14 million. The O&M cost is $1.26/1,000 gallons of treated water produced. The facility is automated and is manned 8 hours/day.

Table 5.11 : Regional Sewer Disposal Capital and Annual O&M Costs

Capital Cost

4" DIP Sewer Line, 1000 ft, @ $60/ft Installed	$60,000
Brine Manhole Installed	$25,000
Equipment Subtotal	$85,000
Piping, I&C, Electrical Allowance (40%)	$34,000
Sub-Total 1	$119,000
Contingency (20%)	$23,800
Sub-Total 2	$142,800
Taxes, Insurance, & Bonding (8.5%)	$12,100
Sub-Total 3	$154,900
Design and CM Fee (15%)	$23,200
Capital Cost	**$178,100**
Capital Cost of Brine Disposal, $/gpd Water Capacity	**$0.07**

Annual O&M Cost (at 26% Well Utilization Rate)

Annual O&M Cost of Brine Disposal, $/1000 gallon of Brine	$2
Annual O&M Cost of Brine Disposal, $/yr	$70,800
Annual O&M Cost, $/1,000 gallon of Treated Water Produced	**$0.28**

Table 5.12 : Cost Comparison for Brine Reduction Technologies

Treatment Alternatives	Capital Cost, $/gpd Water Capacity	Annual O&M Cost, $/1,000 gallon of Total Water Produced
Evaporation Pond	$3.34	$0.85
MVRE with Evaporation Pond	$4.21	$3.24
Regional Sewer Disposal	$0.07	$0.28

Table 5.13 : Non Cost Comparison for Brine Reduction Technologies

Parameters	Evaporation Pond	MVRE with Evaporation Pond	Regional Sewer Disposal
Operational Ease	Medium	Low	Highest
Energy Consumption	Medium	High	Lowest
Footprint	Highest	Medium	Lowest

5.6.3 City of Tolleson

The City of Tolleson operates two 1 MGD wellhead EDR facilities that remove TDS from the well water. The well water TDS and conductivity levels are approximately 1,800 mg/L and 3,000 µS, respectively. The TDS and conductivity levels in the treated water are approximately 300 mg/L and 500 µS, respectively. The EDR recovery rate is approximately 75%. The brine from the EDR facilities is disposed to the sewer.

5.6.4 City of Scottsdale

The City of Scottsdale operates the 10 MGD Advanced Water Treatment (AWT) facility at its Water Campus location. The AWT facility consists of micro-filtration (MF) and RO treatment systems. Class A+ reclaimed effluent that is not used for irrigation is treated by the MF and RO units while Colorado River water is treated only by the MF unit. The MF unit consists of three trains of six units that are fully automated. The RO unit consists of ten trains, each designed for a feed flow of 1 MGD with a 85% recovery rate. Approximately 1.5 MGD of RO brine is discharged into a sewer line which carries sewage by gravity to the 91st Avenue WWTP.

5.6.5 City of Phoenix Western Canal

The future Western Canal Water Treatment Plant (WTP) is proposed to treat Western Canal surface water as well as ground water using RO. The brine generated from the proposed WTP will be discharged to the sewer. The increase in TDS at 91st Avenue WWTP is expected to be in the range of 33 to 104 mg/L. The 91st Avenue WWTP processes 150 MGD of waste water with a TDS concentration in the range of 1,000 to 1,300 mg/L.

5.7 SUMMARY AND CONCLUSIONS

Based on the above discussion, the following is recommended:

- As a short to mid term solution for brine disposal (next 10 years), it is proposed that brine generated from the proposed RO facility be discharged to the regional sewer. The costs for RO with regional sewer disposal are as follows: capital cost $3.8 million ($3.66 million for RO + $178,000 for regional sewer disposal), annual O&M cost $259,000 ($188,600 for RO + $70,800 for regional sewer disposal). The capital and annual O&M costs are calculated based on flows from Wells 21 and 28. These two wells together produce 2,100 gpm. However, only 1,250 gpm flow needs to be treated using RO to reach a TDS goal of 750 mg/L. The annual O&M cost is calculated based on 26% well utilization rate. As a portion of the water would be wasted as brine, the combined treated flow from the RO facility would be 1,850 gpm. The capital and annual O&M costs correspond to $1.44/gpd water capacity and $1.02/1,000 gallons total water produced, respectively.
- Both RO and EDR should be further evaluated based on pretreatment requirements and site specific performance.
- It is recommended the City perform pilot testing for both RO and EDR at Del Rio Booster Station to determine design parameters, water recovery rates, and brine characteristics.
- As a potential long term solution for brine disposal, it is proposed to develop a land application site with salt tolerant plants and dispose of brine into the land application site (no surface water

discharge). The land application area required for the disposal of 34 MG of brine per year is estimated at 35 acres. Assuming a cost of land of $250,000 per acre, the total land acquisition cost for land application would be $8.8 million.

- The approximate cost for pilot testing RO and EDR for TDS removal, and pilot testing land application for brine disposal is $500,000. The RO and EDR pilot testing would take approximately three months. The land application pilot testing would take approximately one year.

CITY OF AVONDALE
WELLHEAD TREATMENT STUDY

FINAL REPORT

CHAPTER 6 - TREATMENT OPTIONS FOR COLDWATER BOOSTER STATION

TABLE OF CONTENTS

6.0 INTRODUCTION 6-1

6.1 WELL 14 6-1
- 6.1.1 Introduction 6-1
- 6.1.2 Water Quality Summary 6-2
- 6.1.3 Treatment Technology Evaluation 6-3
  - 6.1.3.1 Cost Assumptions 6-3
  - 6.1.3.2 Alternative 1 - Single Vessel Adsorption using GIM 6-4
  - 6.1.3.3 Alternative 2 - CF with Sewer Disposal 6-5
- 6.1.4 Comparison of Treatment Alternatives 6-6
- 6.1.5 Recommended Treatment Alternative 6-7

6.2 OPERATIONAL MATRIX AND WATER QUALITY ISSUES FOR CBS WELLS 6-7
- 6.2.1 Treatment Technologies 6-8
  - 6.2.1.1 Alternative 1 - IX using Nitrate Selective Resin 6-8
    - 6.2.1.1.1 Conceptual Design 6-9
    - 6.2.1.1.2 Residuals Handling 6-10
    - 6.2.1.1.3 Cost Basis and Estimate 6-10
  - 6.2.1.2 Alternative 2 - IX using Standard Anion Exchange Resin 6-11
    - 6.2.1.2.1 Conceptual Design 6-11
    - 6.2.1.2.2 Residuals Handling 6-12
    - 6.2.1.2.3 Cost Basis and Estimate 6-12
  - 6.2.1.3 Alternative 3 - Reverse Osmosis System 6-12
  - 6.2.1.4 Alternative 4 - Biological Nitrate Removal Technology 6-12
    - 6.2.1.4.1 Conceptual Design 6-13
    - 6.2.1.4.2 Cost Estimate 6-14
- 6.2.2 Cost and Non-Cost Comparison of Technologies 6-14
- 6.2.3 Recommended Technology 6-14

CITY OF AVONDALE
WELLHEAD TREATMENT STUDY

FINAL REPORT

CHAPTER 6 - TREATMENT OPTIONS FOR COLDWATER BOOSTER STATION

LIST OF FIGURES

Figure 6.1 Adsorption System Process Schematic . . . . . After 6-4

Figure 6.2 CF System Process Schematic . . . . . After 6-6

Figure 6.3 Well 14 ATF Site Plan . . . . . After 6-6

Figure 6.4 IX with Nitrate Selective Resin - Process Schematic . . . . . After 6-9

Figure 6.5 IX with Standard Anion Resin - Process Schematic . . . . . After 6-11

Figure 6.6 Biological Nitrate Removal Technology - Process Schematic . . . . . After 6-13

Figure 6.7 CBS Nitrate Treatment Facility Site Plan . . . . . After 6-14

LIST OF TABLES

Table 6.1 Well 14 Water Quality Summary 6-2

Table 6.2 Single Vessel GIM System Capital and Annual O&M Costs . . . . . After 6-5

Table 6.3 CF Treatment System Capital and Annual O&M Costs . . . . . After 6-6

Table 6.4 Comparison of Arsenic Treatment Alternatives for Well 14 6-7

Table 6.5 Water Quality for CBS Wells 6-7

Table 6.6 Operational Matrix for CBS Wells . . . . . After 6-7

Table 6.7 Design Criteria for NSR IX System 6-9

Table 6.8 NSR IX System - Spent Brine Characteristics 6-10

Table 6.9 NSR IX System Capital and Annual O&M Costs . . . . . After 6-11

Table 6.10 Design Criteria for SSR IX System 6-11

CITY OF AVONDALE
WELLHEAD TREATMENT STUDY

FINAL REPORT

CHAPTER 6 - TREATMENT OPTIONS FOR COLDWATER BOOSTER STATION

LIST OF TABLES (Cont)

Table 6.11 SSR IX System - Spent Brine Characteristics 6-12

Table 6.12 SSR IX System Capital and Annual O&M Costs . . . . . After 6-12

Table 6.13 MB-N2 Nitrate Removal Technology - Case Study Results 6-13

Table 6.14 Design Criteria for Biological Nitrate Removal Technology 6-13

Table 6.15 Biological Nitrate Removal System
Capital and Annual O&M Costs . . . . . After 6-14

Table 6.16 Cost Summary of Treatment Alternatives 6-14

CITY OF AVONDALE
WELLHEAD TREATMENT STUDY

FINAL REPORT

CHAPTER 6 - TREATMENT OPTIONS FOR COLDWATER BOOSTER STATION

6.0 INTRODUCTION

This chapter presents treatment options and recommendations for wells that supply or will supply the CBS. The CBS has seven wells in its service area: Wells 15, 16, 16b, 22, 25, 26 and Pecan Groves Replacement Well. The CBS is also known as EPDS#5. Initially, Well 14 was assumed to be part of the CBS, however, due to the elevated arsenic levels at Well 14 and its relatively long distance from CBS it was decided to recommend a separate wellhead treatment unit for Well 14. Some of the CBS wells (Wells 15, 22 and 25) have nitrate levels higher than the primary MCL of 10 mg/L and require treatment. Along with nitrate, other water quality parameters like total dissolved solids (TDS), Cr-VI, arsenic and sulfate were also considered while selecting the potential nitrate treatment technologies for the CBS. The facility is currently operated under a blending plan to meet the nitrate MCL.

Arsenic and nitrate removal technologies along with brief process descriptions and implementation considerations are presented in this chapter. For the applicable technologies, information related to their design, O&M, and related environmental factors are described. For the wells impacted by arsenic and nitrate, the most economical technology was selected based on estimated costs and non cost factors. Future impacts of a Cr-VI regulation are discussed in Chapter 4 for Wells 14, 15 and 26.

6.1 WELL 14

6.1.1 Introduction

This section presents water quality information for Well 14, and a brief description of arsenic removal technologies. This information is utilized for developing a cost-effective arsenic mitigation solution for Well 14. Based on its location and treatment needs, a stand alone system is recommended as no benefit would be achieved by blending Well 14 with other CBS wells as arsenic levels would be elevated in the entire supply.

Well 14 is located on the west side of Eliseo C. Felix Jr Way (also known as 10th Street), midway between I-10 and Van Buren Street. The well pumps directly into the distribution system, however, due to high arsenic levels, the well is offline. The current major equipment at Well 14 includes the well pump, motor control center (MCC), and a standby generator. A concrete pad located in the SE corner of the site previously housed a chlorination system. The well pumps at a constant rate of approximately 450 gallons per minute (gpm), with an influent arsenic level of 40 ppb, which exceeds the arsenic MCL. The well is equipped with a 6-inch discharge line that discharges to the distribution system, and a 4-inch pump to waste line that discharges to a concrete box.

The objectives of this section are summarized below:

- Summarize the raw water quality at Well 14 and evaluate water quality parameters that may impact treatment technologies used for arsenic mitigation.
- Perform an evaluation of various arsenic mitigation alternatives for Well 14 taking into consideration site-specific issues such as land availability, residuals handling and disposal, and neighborhood aesthetics.

6.1.2 Water Quality Summary

A summary of the water quality at Well 14 based on information obtained from the City is presented in Table 6.1. As shown in the table, the well has an elevated arsenic level of 40 ppb and a high pH level of 8.7. The water quality parameters that impact arsenic removal using adsorption are pH, fluoride, silica, vanadium, chloride, iron, and manganese. However, the well could not be sampled for these water quality parameters as the well is offline. Arsenic treatment technologies in this study are chosen based on the available water quality data and previous experience with other City wells.

Table 6.1: Well 14 Water Quality Summary

Parameter	Units	Value
Arsenic	ppb	40
pH	standard units	8.7
Alkalinity (as $CaCO_3$)	mg/L	150
Fluoride	mg/L	NA
Silica (as SiO_2)	mg/L	NA
Vanadium	mg/L	NA
Phosphorus	mg/L	NA
Iron	mg/L	NA
Manganese	mg/L	NA
Nitrate	mg/L	1.6
Chloride	mg/L	NA
Sulfate	mg/L	45
Total Dissolved Solids	mg/L	320
Chromium Total	ppb	38
Chromium-VI	ppb	15[i]

Notes:
NA - Not Available
I - Assumed concentration.

6.1.3 Treatment Technology Evaluation

For the purpose of this evaluation, two treatment processes were considered - adsorption using granular iron media (GIM) and coagulation using granular media filtration (CF). Other treatment technologies such as coagulation with microfiltration nano filtration, reverse osmosis, electrodialysis, electrodialysis reversal, and ion exchange (IX) were not considered due to the complexity of the processes, higher treatment cost, higher operation and maintenance (O&M) cost, residuals handling issues, water loss, and other implementation issues. It is noted that IX was initially considered, however, previous experience showed that IX is generally more viable for central facilities with higher flow rates and where both arsenic and nitrate mitigation is required. The treatment goal for arsenic mitigation is an arsenic level of 8 ppb (80% of the Arsenic MCL, based on a 20% factor of safety) in the water entering the distribution system.

The above listed assumptions were used to evaluate the following arsenic treatment alternatives for Well 14:

- Alternative 1 - Single Vessel Adsorption using GIM
- Alternative 2 - CF with Sewer Disposal

6.1.3.1 Cost Assumptions

The basis of developing costs for the arsenic treatment technologies is shown below:

- Basis for Adsorption Systems:
  - Operating pH of 6.8 (System will not remove arsenic at pH 8.7).
  - Single vessel containing adsorption media.
  - Based on the influent arsenic level of 40 ppb, and assuming no impacts from other water quality parameters described in Section 6.1.2, the run length of the various adsorption media to 10 ppb arsenic breakthrough is:
    - Granular Ferric Hydroxide (GFH) - 30,000 BVs.
    - Bayoxide E-33 - 40,000 BVs (media can also be regenerated).
  - An EBCT of 4.0 minutes per vessel.
- Basis for CF Systems:
  - Operating pH of 7.3 (CF system will not remove arsenic at pH 8.7).
  - One filter vessel for redundancy during backwash and maintenance operations.
  - Rapid mixing intensity of 1000 s^{-1}.
  - Filter run length of 12-16 hours, based on the results of previous pilot and full scale facilities.
- Vendor quotes were obtained for significant capital cost items such as pressure vessels, adsorption media, filter media, backwash holding tank, pumps, chemical feed facilities, etc.
- Contractor pricing information for concrete, earthwork, electrical, instrumentation and piping.
- Power costs of $0.10/kWh.
- Labor charges of $30 to $50 per person per hour based on expertise.
- Contingencies and allowances:
  - 20% for contingencies.
  - 40% for piping, instrumentation and controls, and electrical allowance.
  - 15% for design and construction management services.
  - 8.5% for taxes, insurance, and bonding.

6.1.3.2 Alternative 1 - Single Vessel Adsorption using GIM

Adsorption refers to the accumulation of material at the interface between two phases (water and solid media). As water containing ionized arsenic passes through an adsorption column, arsenic sorbs to the solid media due to surface attractive forces. Over a period of time, the adsorption media loses its capacity, and needs to be regenerated or replaced. Since on-site media regeneration is tedious and due to problems associated with residuals disposal and chemicals handling, regenerating adsorption media is generally not performed. The alternative option is using throw-away adsorption media, which eliminates the complexities associated with regeneration.

Several types of adsorbents are commercially available. Established adsorption media includes activated alumina, iron modified activated alumina (Fe-AA), GIM such as granular ferric hydroxide (GFH) and Bayoxide E-33, ArsenX, CFH-0818, manganese dioxide media, and other composites using zinc, copper, and titanium. Of these products, GIM is the most proven, established and commercially available. GIM has the added advantage of performing well at higher pH levels (7.0 - 8.0) and is a viable process without the use of pH reduction chemicals. It is anticipated that in coming years, other media may become available with similar properties, but for the purposes of this evaluation, GIM will be used as the baseline adsorption technology. A system that is designed for GIM can be replaced with an alternate media in the future without any physical modifications. One significant advantage of the adsorption process is its flexibility (ability to accommodate more cost-effective adsorbents in the future).

GIM such as GFH or Bayoxide E-33 are effective in removing arsenic utilizing a fixed bed adsorption process. The adsorptive capacity of GIM is several magnitudes greater than other alumina based sorbents, as observed in recent pilot tests conducted by the City of Phoenix and NCS Engineers. If a regenerable media is preferred by the City, the GIM can be replaced with Bayoxide E-33 due to better performance in comparison to other regenerable media, as demonstrated in the pilot study.

A single vessel GIM treatment facility would treat the entire well flow of 450 gpm at an influent arsenic level of 40 ppb. The raw water pH would be adjusted to 6.8 using a carbon dioxide feed system. The hydraulic loading rate (HLR) and EBCT are 7.1 gpm/ft^2 and 4.0 minutes, respectively. The pH of the treated water would be readjusted to 7.8 using a caustic soda feed system to prevent distribution system corrosion. The adsorption contactor would be operated until the effluent arsenic level reaches 8 ppb. At this point, the media in the adsorption contactor would be replaced. The GIM media would be backwashed every three months; the backwash volume would be approximately 13 BVs.

Distribution system water would be used for backwashing the adsorption contactor. During maintenance and media changeout operations (1-2 weeks), the vessel would be taken offline. A schematic of a single vessel GIM treatment system is shown in Figure 6.1.

A description of the system is provided below:

- One 9-ft. diameter adsorption contactor.
- Treatment and backwash/rinse piping manifolds including valves, meters, instruments, etc. located at grade level.
- HLR of 7.1 gpm/ft^2 at an EBCT of 4.0 minutes.
- Media depth of 3.8 feet.

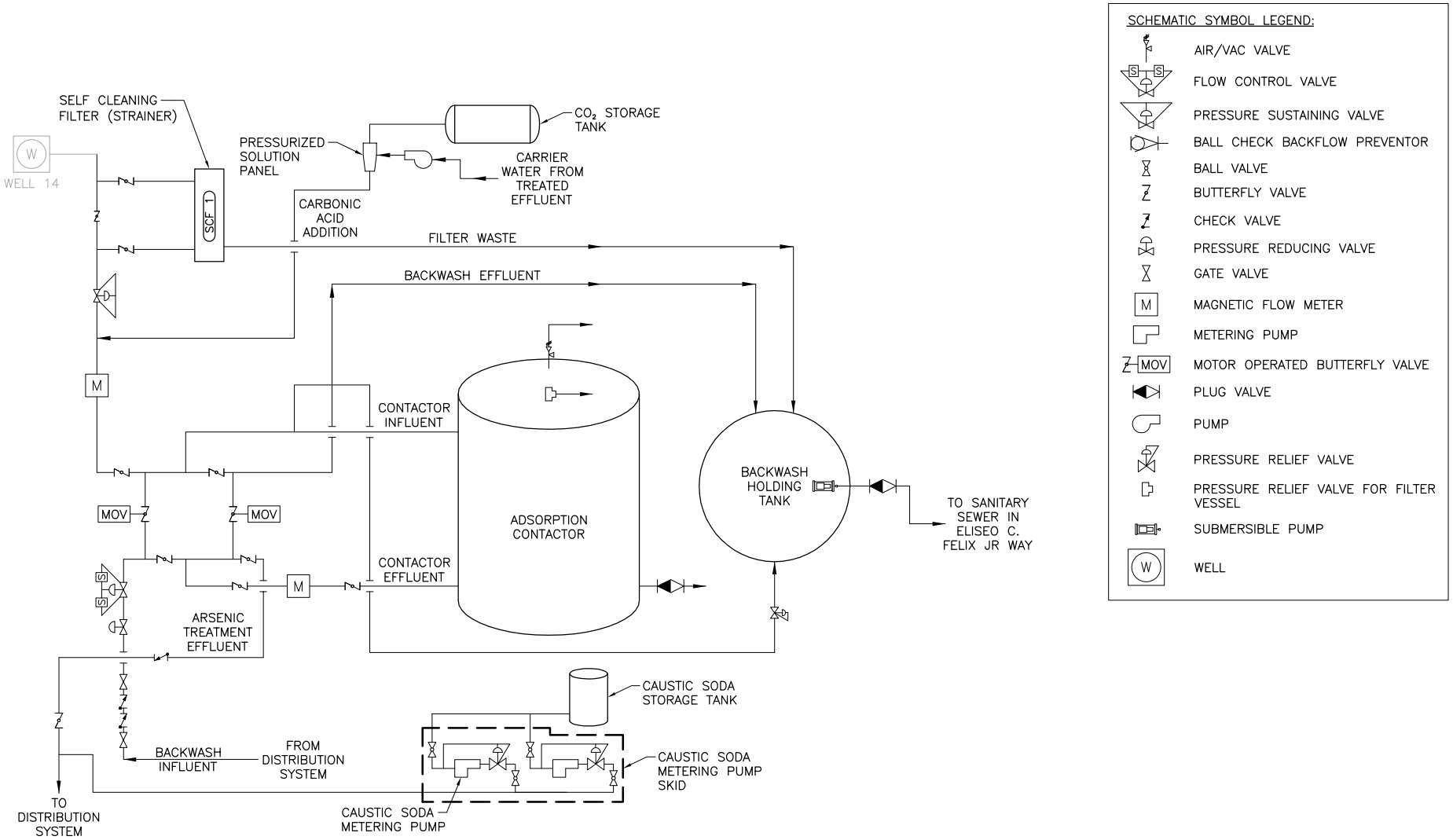

FIGURE 6.1

ADSORPTION SYSTEM PROCESS SCHEMATIC

CITY OF AVONDALE WELLHEAD TREATMENT STUDY

NCS Engineers

Aug 28, 2013 – 4:21pm
Z:\0445 – City of Avondale – Wellhead Treatment Study\CAD\Draft Final Report\FIGURE 6.1 – ADSORPTION SYSTEM PROCESS SCHEMATIC.dwg

- pH adjustment to 6.8 prior to GIM treatment using carbon dioxide feed system.
- pH adjustment to 7.8 after GIM treatment using caustic soda feed system.
- Based on media run length of 30,000 BVs and 26% well utilization rate, the GIM treatment system will operate for 321 days prior to media replacement. Approximately 229 ft^3 of media (based on media density of 72 $lbs./ft^3$) will be regenerated or replaced during each media regeneration/replacement event.
- Based on media wet density of 120 $lbs./ft^3$, approximately 17 tons of spent media will be disposed to a non-hazardous waste landfill every year.
- Distribution system water is used for backwashing and rinsing the adsorption contactor.
- The backwash holding tank will hold one complete backwash and rinse cycle.
- A backwash pump station and 4-inch pipeline will deliver backwash to the nearest sewer manhole (assuming 500 feet to the nearest sewer manhole in Eliseo Felix Jr Way).
- A programmable logic controller (PLC) panel and automation through supervisory control and data acquisition (SCADA) to send system status and notify alarms.
- The capital and annual O&M costs for the single vessel GIM treatment system are calculated at $802,100 and $44,200, respectively. The annual O&M cost is calculated at a 26% well utilization rate. The 20-year present worth cost is calculated at $1.4 million. A breakdown of the capital and annual O&M costs is shown in Table 6.2.

6.1.3.3 Alternative 2 - CF with Sewer Disposal

CF treatment technology involves a pressurized granular media filtration process with pretreatment. Pretreatment includes coagulation using ferric chloride. As(V) is removed effectively as iron particles attach to arsenic for subsequent removal by granular media (anthracite or other natural or synthetic composites). Backwash water is <5% of plant flow and is recovered on-site or sent to the sewer. An optimum ferric chloride dose to form a floc and precipitate arsenic is 3-5 mg/L. The effluent arsenic levels would be less than 5 ppb. Hydraulic loading rates range between 5 and 8 gpm/ft^2. The spent backwash may be disposed to the sewer if pretreatment limits (or technically based local limits, TBLLs) can be met. The spent backwash would contain at least 20 times as much arsenic as the well water that is treated. For example, a well with 15 ppb arsenic using a CF system would generate backwash with 300 ppb arsenic in the waste stream. Ferric chloride storage and feed systems would be required. Hazardous wastes would not be generated. pH adjustment to <7.5 is required if the raw water pH values are greater than 8.0, in order to form floc that can be filtered.

CF is attractive for larger treatment plants (>1 MGD), and those with higher levels of arsenic (>20 ppb) and which also have a higher degree of operator expertise. In instances where a filter already exists (surface WTP or well located near a surface WTP), this process can be implemented in a short time and is very cost effective. In comparison to adsorption, O&M cost savings can be expected for larger installations, as media replacement is not required. Many vendors offer "proprietary" forms of CF treatment, using either special media or vessel configurations. In essence, these proprietary packages use the same principles as the CF process and should be considered as a CF process.

The CF treatment facility at Well 14 would treat 450 gpm (entire well flow) at an influent arsenic level of 40 ppb and pH adjusted to 7.3. The HLR and ferric chloride dose would be 7.5 gpm/ft^2 and 5 mg/L, respectively. These design conditions would result in approximately 12-16 hours of run length. The treatment facility would consist of two filter vessels, each vessel treating one half of the well flow. When the effluent arsenic level in the two vessels reaches 6-8 ppb, they would be backwashed and the backwash volume discharged to a backwash holding tank, and subsequently discharged to the sanitary sewer. The two filter vessels would be backwashed in sequence and the

Table 6.2 : Single Vessel GIM System Capital and Annual O&M Costs

Capital Cost

Residuals Handling Equipment & Piping	$63,900
Influent Strainer Equipment	$14,000
GIM System Vessel & Piping	$152,200
Chemical Feed Equipment	$134,700
Chemicals Storage Shed	$15,000
Concrete Foundation for Treatment Vessels	$10,000
Piping, I&C, Electrical, Yard Piping Allowance	$145,900
Sub Total 1	$535,700
Contingency (20%)	$107,100
Taxes, Insurance, & Bonding (8.5%)	$54,600
Sub Total 2	$697,500
Design & CM Fee (15%)	$104,600
Capital Cost	**$802,100**

Annual O&M Cost (at 26% Well Utilization Rate)

Annual Power Cost, $/yr	$300
Carbon Dioxide Cost, $/yr	$3,100
Caustic Soda Cost, $/yr	$200
Annual Media Replacement Cost, $/yr	$12,800
Media Replacement Service Cost, $	$2,000
Waste Media Disposal Cost, $/yr	$500
Total Estimated Labor Cost, $/yr	$18,300
Equipment Maintenance Cost, $/yr	$7,000
Annual O&M Cost, $/yr	**$44,200**

20-year Present Worth Cost	**$1,353,000**

entire well flow of 450 gpm used for backwashing one vessel. A schematic of a CF treatment system with sewer disposal is shown in Figure 6.2. It is estimated that the arsenic concentration in the backwash streams would be 2 mg/L.

A description of the system is provided below:

- Two 6-ft. diameter filter vessels, both in simultaneous operation treating one half of the well flow of 450 gpm.
- Treatment and backwash/rinse piping manifolds including valves, meters, instruments, etc. located at grade level, outside.
- HLR of 7.5 gpm/ft^2.
- Coagulation using a ferric chloride feed system and pH adjustment to 7.3 prior to filtration using a carbon dioxide feed system.
- pH adjustment to 7.8 after filtration using caustic soda feed system.
- In-line rapid mixer with a mixing speed of 1000 s^{-1}
- Backwash holding tank to hold the backwash and rinse volume from two filter vessels.
- A backwash pump station and 4-inch pipeline to the nearest sewer manhole (assuming 500 feet to the nearest sewer manhole in Eliseo C. Felix Jr Way).
- A PLC panel and automation through SCADA to send system status and notify alarms.
- The capital and annual O&M costs for the CF treatment system are calculated at $811,100 and $39,000, respectively. The annual O&M cost is calculated at a 26% well utilization rate. The 20-year present worth cost is calculated at $1.3 million. A breakdown of the capital and annual O&M costs is shown in Table 6.3.

6.1.4 Comparison of Treatment Alternatives

A summary of the estimated capital, annual O&M, and 20-year present worth costs for the evaluated treatment alternatives is presented in Table 6.4. Alternative 1 (single vessel GIM treatment) has a lower capital cost than for Alternative 2 (CF treatment with sewer disposal). However, the 20-year present worth costs and the annual O&M costs for Alternative 1 are slightly higher than for Alternative 2. The higher O&M cost is mainly due to adsorption media change out and disposal. Based on non cost factors, both processes require chemical addition and both do not require any additional waste disposal handling facilities as the backwash water would be disposed to the sewer. In the case of an adsorption system, arsenic will be chemically bound to adsorption media and will not detach during backwash. Therefore, backwash effluent can be discharged to the sewer. In the case of CF system, arsenic removed from the well water would be present in the ferric floc. During backwash, arsenic removed from well water would become part of the backwash effluent stream. The CF backwash effluent is expected to have an arsenic level of 2 mg/L or more which is higher than the City's local limit of 0.41 mg/L for arsenic for sewer disposal. As the CF backwash effluent can not be discharged to sewer and offsite disposal would be very expensive, the Alternative 1 - single vessel adsorption system is recommended for arsenic removal at Well 14. Figures 6.1 and 6.3 present the process schematic and site plan, respectively, for the proposed arsenic treatment facility (ATF).

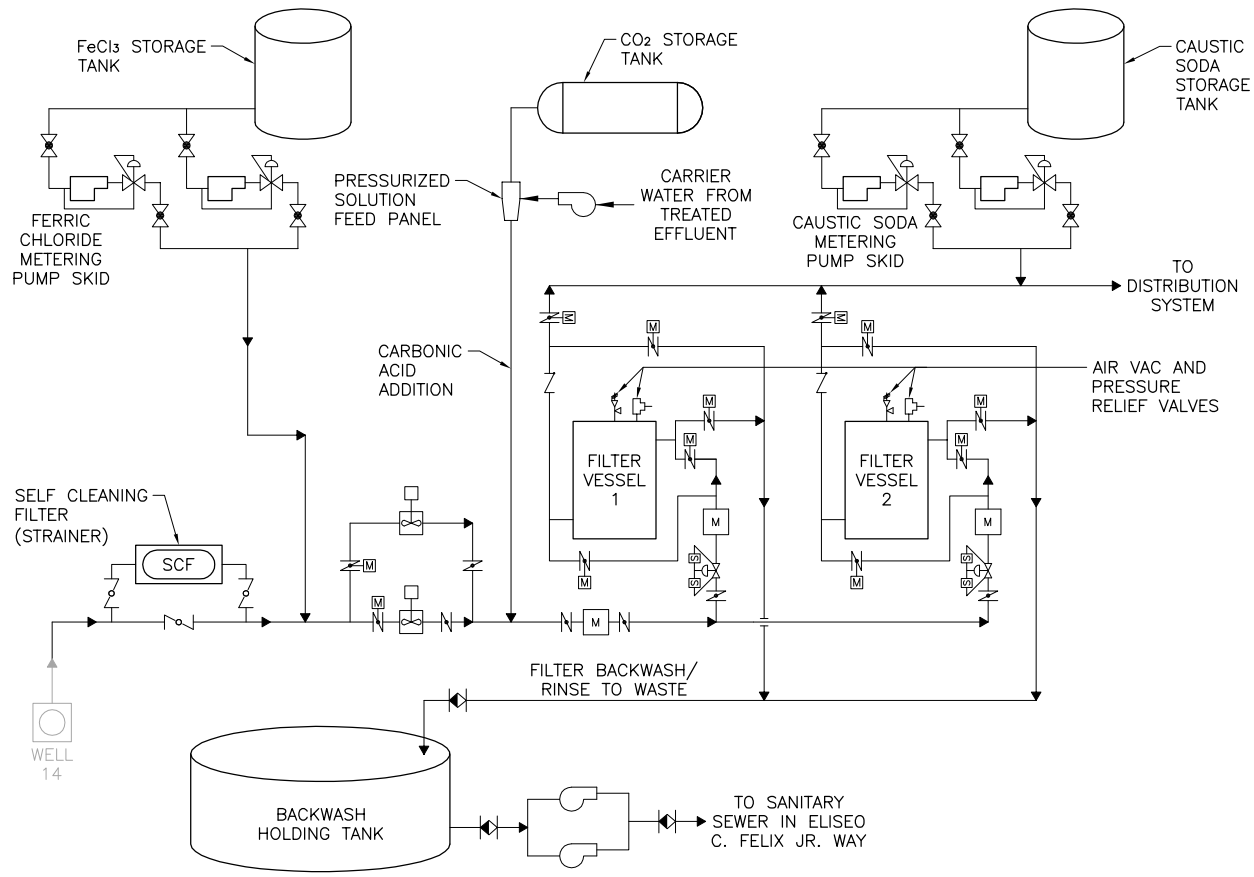

SCHEMATIC SYMBOL LEGEND:

- AIR RELIEF VALVE
- BUTTERFLY VALVE
- MOTORIZED BUTTERFLY VALVE
- BALL VALVE
- CHECK VALVE
- PUMP
- FLOW METER
- FLOW CONTROL VALVE
- RAPID MIXER
- WELL PUMP
- PLUG VALVE
- GATE VALVE
- PRESSURE RELIEF VALVE
- PRESSURE RELIEF VALVE FOR TREATMENT VESSEL
- PRESSURE REDUCING VALVE
- METERING PUMP

FIGURE 6.2
CF SYSTEM PROCESS SCHEMATIC
CITY OF AVONDALE WELLHEAD TREATMENT STUDY

NCS Engineers

Aug 28, 2013 – 4:23pm
Z:\0445 – City of Avondale – Wellhead Treatment Study\CAD\Draft Final Report\FIGURE 6.2 – SCHEMATIC OF CF TREATMENT SYSTEM.dwg

Table 6.3 : CF Treatment System Capital and Annual O&M Costs

Capital Cost

Influent Strainer	$14,400
Rapid Mixing	$18,000
Granular Media Filters	$120,000
Chemical Feed Systems	$141,900
Backwash Storage and Disposal to Sewer	$65,500
Treatment Equipment Concrete Foundation	$18,000
Storage Shed for Chemicals	$20,000
Piping, I&C, Electrical, Yard Piping Allowance	$143,900
Subtotal 1	$541,700
Contingency (20%)	$108,300
Taxes, Insurance, & Bonding (8.5%)	$55,300
Subtotal 2	$705,300
Design & CM Fee (15%)	$105,800
Capital Cost	**$811,100**

Annual O&M Cost (at 26% Well Utilization Rate)

Annual Power Cost, $/yr	$300
Ferric Chloride Cost, $/yr	$100
Carbon Dioxide Cost, $/yr	$2,100
Caustic Soda Cost, $/yr	$400
Backwash/Residuals Disposal Cost, $/yr	$700
Total Estimated Labor Cost, $/yr	$28,300
Equipment Maintenance Cost, $/yr	$7,100
Annual O&M Cost, $/yr	**$39,000**

20-year Present Worth Cost	**$1,297,000**

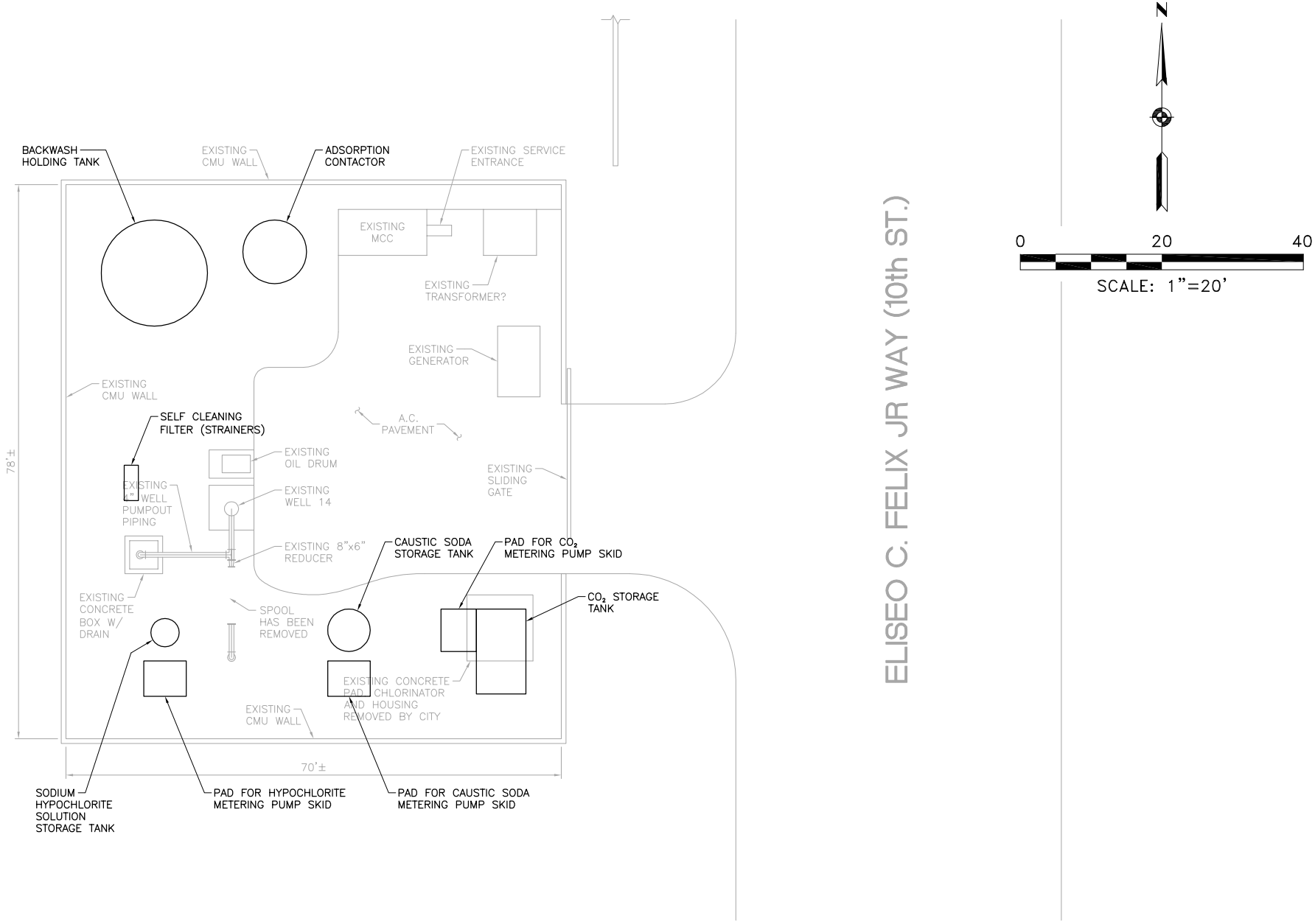

FIGURE 6.3
WELL 14 ATF SITE PLAN
CITY OF AVONDALE WELLHEAD TREATMENT STUDY

NCS Engineers

Aug 28, 2013 – 4:24pm
Z:\0445 – City of Avondale – Wellhead Treatment Study\CAD\Draft Final Report\FIGURE 6.3 – WELL 14 BASEMAP.dwg

Table 6.4 : Comparison of Arsenic Treatment Alternatives for Well 14

Treatment Alternative	Capital Cost	Annual O&M Cost	20-year Present Worth Cost
Alternative 1 - Single Vessel GIM Treatment	$802,100	$44,200	$1,353,000
Alternative 2 - CF Treatment with Sewer Disposal	$811,100	$39,000	$1,297,000

6.1.5 Recommended Treatment Alternative

The recommended treatment alternative for Well 14 arsenic treatment is adsorption (Alternative 1 - Single Vessel GIM Treatment). The capital and annual O&M costs for the Well 14 ATF were calculated at $802,100 and $44,200, respectively. The annual O&M cost was calculated at a 26% well utilization rate. The capital and annual O&M costs correspond to $1.24/gpd water capacity and $0.72/1,000 gallons total water produced, respectively.

If Cr-VI MCL is promulgated and the actual Cr-VI concentration in the well water is above the primary MCL, the City would have to construct a separate Cr-VI treatment facility. This would require the City acquire additional land, approximately 100 feet x 80 feet, adjacent to the Well 14 site.

6.2 OPERATIONAL MATRIX AND WATER QUALITY ISSUES FOR CBS WELLS

At present, CBS receives water from Wells 15, 16, and 25. In the future, CBS would receive water from additional wells including Wells 16b, 22, 26, and the Pecan Groves Replacement Well. A summary of the water quality at Wells 15, 16, 16b, 22, 25, 26, and the Pecan Groves Replacement Well is presented in Table 6.5. Wells 15, 22, and 25 have nitrate issues. Some of the wells also have high levels of sulfate, Cr-VI, and TDS which are anticipated to impact nitrate removal.

Table 6.5 : Water Quality of CBS Wells

Wells	Flow Rate (gpm)	Arsenic (ppb)	Nitrate (mg/L)	Sulfate (mg/L)	Chromium VI (ppb)	TDS (mg/L)	Alkalinity as $CaCO_3$ (mg/L)
Well 15	650	4.9	8.9	97	18	724	123
Well 16	2200	3.9	5.8	85	1.8	688	158
Well 16b	650	5.3	3.6	88	1	687	161
Well 22	1200	3.1	10	110	5.5	890	120
Well 25	1200	4.7	12.5	117	5.5	833	135
Well 26	1200	4.2	5.3	86	15	688	159
Pecan Groves Replacement Well	1200	5.3	3.61	88	1	687	161

Based on the well flows and water quality data provided by the City, an operational matrix was developed to verify the blended water nitrate, sulfate, arsenic, TDS and Cr-VI levels for various well combinations, as shown in Table 6.6. Based on the well combinations and percent flow to be treated, a weighted average of water quality parameters was calculated for all the options. From the matrix, two critical operating conditions were observed:

- Combination of Wells 15, 22 and 25 will require 48% of water to be treated (1,460 gpm) to

Table 6.6 : Operational Matrix for CBS Wells

Well Operating Combinations	Combined Flow Rate (gpm)	Average Nitrate (mg/L)	% Flow rate To be Treated	EPDS Nitrate (mg/L)	Average Arsenic (ppb)	Average Sulfate (mg/L)	Average Cr-VI (ppb)	Average TDS (mg/L)	Treated Flow (gpm)	Cr-VI in Treated Water* (ppb)
PG	1,200	3.6	0	3.6	5.3	88	1.0	687	0	0.4
26	1,200	5.3	0	5.3	4.2	86	15.0	688	0	6.0
26 PG	2,400	4.5	0	4.5	4.8	87	8.0	687	0	3.2
25	1,200	12.5	60	8.0	4.7	117	5.5	833	720	2.2
25 PG	2,400	8.1	2	8.0	5.0	103	3.3	760	39	1.3
25 26	2,400	8.9	23	8.0	4.5	102	10.3	760	554	4.1
25 26 PG	3,600	7.1	0	7.1	4.7	97	7.2	736	0	2.9
22	1,200	10.0	40	8.0	3.1	110	5.5	890	480	2.2
22 PG	2,400	6.8	0	6.8	4.2	99	3.3	789	0	1.3
22 26	2,400	7.7	0	7.7	3.7	98	10.3	789	0	4.1
22 26 PG	3,600	6.3	0	6.3	4.2	95	7.2	755	0	2.9
22 25	2,400	11.3	52	8.0	3.9	114	5.5	862	1,248	2.2
22 25 PG	3,600	8.7	19	8.0	4.4	105	4.0	803	681	1.6
22 25 26	3,600	9.3	30	8.0	4.0	104	8.7	804	1,069	3.5
22 25 26 PG	4,800	7.9	0	7.9	4.3	100	6.8	774	0	2.7
16b	650	3.6	0	3.6	5.3	88	1.0	687	0	0.4
16b PG	1,850	3.6	0	3.6	5.3	88	1.0	687	0	0.4
16b 26	1,850	4.7	0	4.7	4.8	87	8.0	687	0	3.2
16b 26 PG	3,050	4.3	0	4.3	4.9	87	5.7	687	0	2.3
16b 25	1,850	9.4	31	8.0	5.0	103	3.3	760	581	1.3
16b 25 PG	3,050	7.1	0	7.1	5.1	98	2.5	736	0	1.0
16b 25 26	3,050	7.8	0	7.8	4.7	97	7.2	736	0	2.9
16b 25 26 PG	4,250	6.6	0	6.6	4.9	95	5.6	724	0	2.3
16b 22	1,850	7.8	0	7.8	4.2	99	3.3	789	0	1.3
16b 22 PG	3,050	6.1	0	6.1	4.6	95	2.5	755	0	1.0
16b 22 26	3,050	6.8	0	6.8	4.2	95	7.2	755	0	2.9
16b 22 26 PG	4,250	5.9	0	5.9	4.5	93	5.6	738	0	2.3

Well Operating Combinations	Combined Flow Rate (gpm)	Average Nitrate (mg/L)	% Flow rate To be Treated	EPDS Nitrate (mg/L)	Average Arsenic (ppb)	Average Sulfate (mg/L)	Average Cr-VI (ppb)	Average TDS (mg/L)	Treated Flow (gpm)	Cr-VI in Treated Water* (ppb)
16b 22 25	3,050	9.6	35	8.0	4.4	105	4.0	803	1,069	1.6
16b 22 25 PG	4,250	7.9	0	7.9	4.6	101	3.3	774	0	1.3
16b 22 25 26	4,250	8.4	12	8.0	4.3	100	6.8	774	500	2.7
16b 22 25 26 PG	5,450	7.3	0	7.3	4.5	98	5.6	757	0	2.2
16	2,200	5.8	0	5.8	3.9	85	1.8	688	0	0.7
16 PG	3,400	5.0	0	5.0	4.6	87	1.4	688	0	0.6
16 26	3,400	5.6	0	5.6	4.1	86	8.4	688	0	3.4
16 26 PG	4,600	5.1	0	5.1	4.5	86	5.9	688	0	2.4
16 25	3,400	8.2	5	8.0	4.3	101	3.7	761	177	1.5
16 25 PG	4,600	7.0	0	7.0	4.6	97	2.8	736	0	1.1
16 25 26	4,600	7.4	0	7.4	4.3	96	7.4	736	0	3.0
16 25 26 PG	5,800	6.6	0	6.6	4.5	94	5.8	724	0	2.3
16 22	3,400	7.3	0	7.3	3.5	98	3.7	789	0	1.5
16 22 PG	4,600	6.3	0	6.3	4.1	94	2.8	755	0	1.1
16 22 26	4,600	6.8	0	6.8	3.7	94	7.4	755	0	3.0
16 22 26 PG	5,800	6.1	0	6.1	4.1	92	5.8	738	0	2.3
16 22 25	4,600	8.6	18	8.0	3.9	104	4.3	804	812	1.7
16 22 25 PG	5,800	7.6	0	7.6	4.3	100	3.5	775	0	1.4
16 22 25 26	5,800	8.0	0	8.0	4.0	100	7.0	775	0	2.8
16 22 25 26 PG	7,000	7.2	0	7.2	4.2	97	5.8	757	0	2.3
16 16b	2,850	5.3	0	5.3	4.6	87	1.4	688	0	0.6
16 16b PG	4,050	4.8	0	4.8	4.8	87	1.3	687	0	0.5
16 16b 26	4,050	5.3	0	5.3	4.5	86	5.9	688	0	2.4
16 16b 26 PG	5,250	4.9	0	4.9	4.7	87	4.7	687	0	1.9
16 16b 25	4,050	7.4	0	7.4	4.6	97	2.8	736	0	1.1
16 16b 25 PG	5,250	6.6	0	6.6	4.8	95	2.3	724	0	0.9
16 16b 25 26	5,250	6.9	0	6.9	4.5	94	5.8	724	0	2.3
16 16b 25 26 PG	6,450	6.3	0	6.3	4.7	93	4.9	717	0	1.9

Well Operating Combinations	Combined Flow Rate (gpm)	Average Nitrate (mg/L)	% Flow rate To be Treated	EPDS Nitrate (mg/L)	Average Arsenic (ppb)	Average Sulfate (mg/L)	Average Cr-VI (ppb)	Average TDS (mg/L)	Treated Flow (gpm)	Cr-VI in Treated Water* (ppb)
16 16b 22	4,050	6.7	0	6.7	4.1	94	2.8	755	0	1.1
16 16b 22 PG	5,250	6.0	0	6.0	4.4	93	2.3	738	0	0.9
16 16b 22 26	5,250	6.4	0	6.4	4.1	92	5.8	738	0	2.3
16 16b 22 26 PG	6,450	5.9	0	5.9	4.4	91	4.9	728	0	1.9
16 16b 22 25	5,250	8.0	1	8.0	4.3	100	3.5	775	33	1.4
16 16b 22 25 PG	6,450	7.2	0	7.2	4.5	98	3.0	757	0	1.2
16 16b 22 25 26	6,450	7.5	0	7.5	4.2	97	5.8	757	0	2.3
16 16b 22 25 26 PG	7,650	6.9	0	6.9	4.4	96	5.0	745	0	2.0
15	650	8.9	23	8.0	4.9	97	18.0	724	150	7.2
15 PG	1,850	5.5	0	5.5	5.1	93	9.5	706	0	3.8
15 26	1,850	6.6	0	6.6	4.6	92	16.5	706	0	6.6
15 26 PG	3,050	5.4	0	5.4	4.8	90	11.3	700	0	4.5
15 25	1,850	11.2	52	8.0	4.8	107	11.8	779	960	4.7
15 25 PG	3,050	8.2	7	8.0	5.0	101	8.2	748	218	3.3
15 25 26	3,050	8.9	23	8.0	4.6	100	12.8	748	704	5.1
15 25 26 PG	4,250	7.4	0	7.4	4.8	97	9.9	733	0	4.0
15 22	1,850	9.6	35	8.0	4.0	104	11.8	807	647	4.7
15 22 PG	3,050	7.2	0	7.2	4.4	98	8.2	767	0	3.3
15 22 26	3,050	7.9	0	7.9	4.1	98	12.8	767	0	5.1
15 22 26 PG	4,250	6.7	0	6.7	4.4	95	9.9	747	0	4.0
15 22 25	3,050	10.7	48	8.0	4.2	108	9.7	816	1,458	3.9
15 22 25 PG	4,250	8.7	20	8.0	4.5	103	7.5	784	832	3.0
15 22 25 26	4,250	9.2	29	8.0	4.2	103	11.0	784	1,222	4.4
15 22 25 26 PG	5,450	8.0	0	8.0	4.4	100	9.0	764	0	3.6
15 16b	1,300	6.3	0	6.3	5.1	93	9.5	706	0	3.8
15 16b PG	2,500	5.0	0	5.0	5.2	91	6.7	699	0	2.7
15 16b 26	2,500	5.8	0	5.8	4.8	90	11.3	700	0	4.5
15 16b 26 PG	3,700	5.1	0	5.1	4.9	90	8.8	696	0	3.5

Well Operating Combinations	Combined Flow Rate (gpm)	Average Nitrate (mg/L)	% Flow rate To be Treated	EPDS Nitrate (mg/L)	Average Arsenic (ppb)	Average Sulfate (mg/L)	Average Cr-VI (ppb)	Average TDS (mg/L)	Treated Flow (gpm)	Cr-VI in Treated Water* (ppb)
15 16b 25	2,500	9.3	29	8.0	5.0	101	8.2	748	735	3.3
15 16b 25 PG	3,700	7.4	0	7.4	5.1	98	6.4	733	0	2.6
15 16b 25 26	3,700	8.0	0	8.0	4.8	97	9.9	733	0	4.0
15 16b 25 26 PG	4,900	6.9	0	6.9	4.9	95	8.1	724	0	3.2
15 16b 22	2,500	8.1	2	8.0	4.4	98	8.2	767	41	3.3
15 16b 22 PG	3,700	6.6	0	6.6	4.7	96	6.4	747	0	2.6
15 16b 22 26	3,700	7.2	0	7.2	4.4	95	9.9	747	0	4.0
15 16b 22 26 PG	4,900	6.3	0	6.3	4.6	94	8.1	735	0	3.2
15 16b 22 25	3,700	9.5	33	8.0	4.5	103	7.5	784	1,230	3.0
15 16b 22 25 PG	4,900	8.1	2	8.0	4.7	100	6.2	764	80	2.5
15 16b 22 25 26	4,900	8.5	13	8.0	4.4	100	9.0	764	659	3.6
15 16b 22 25 26 PG	6,100	7.5	0	7.5	4.6	98	7.7	751	0	3.1
15 16	2,850	6.5	0	6.5	4.4	91	9.9	706	0	4.0
15 16 PG	4,050	5.6	0	5.6	4.7	90	6.9	700	0	2.8
15 16 26	4,050	6.1	0	6.1	4.3	89	11.6	700	0	4.6
15 16 26 PG	5,250	5.6	0	5.6	4.6	89	9.0	697	0	3.6
15 16 25	4,050	8.3	9	8.0	4.5	100	8.4	748	349	3.4
15 16 25 PG	5,250	7.2	0	7.2	4.7	97	6.6	733	0	2.6
15 16 25 26	5,250	7.6	0	7.6	4.4	96	10.1	733	0	4.0
15 16 25 26 PG	6,450	6.9	0	6.9	4.6	95	8.3	724	0	3.3
15 16 22	4,050	7.5	0	7.5	4.0	97	8.4	767	0	3.4
15 16 22 PG	5,250	6.6	0	6.6	4.3	95	6.6	747	0	2.6
15 16 22 26	5,250	7.0	0	7.0	4.0	95	10.1	747	0	4.0
15 16 22 26 PG	6,450	6.4	0	6.4	4.3	93	8.3	735	0	3.3
15 16 22 25	5,250	8.7	18	8.0	4.2	102	7.7	784	965	3.1
15 16 22 25 PG	6,450	7.7	0	7.7	4.4	99	6.4	764	0	2.5
15 16 22 25 26	6,450	8.0	2	8.0	4.2	99	9.2	765	100	3.7
15 16 22 25 26 PG	7,650	7.3	0	7.3	4.4	97	7.8	752	0	3.1

Well Operating Combinations	Combined Flow Rate (gpm)	Average Nitrate (mg/L)	% Flow rate To be Treated	EPDS Nitrate (mg/L)	Average Arsenic (ppb)	Average Sulfate (mg/L)	Average Cr-VI (ppb)	Average TDS (mg/L)	Treated Flow (gpm)	Cr-VI in Treated Water* (ppb)
15 16 16b	3,500	6.0	0	6.0	4.7	90	6.9	700	0	2.8
15 16 16b PG	4,700	5.4	0	5.4	4.9	90	5.5	697	0	2.2
15 16 16b 26	4,700	5.8	0	5.8	4.6	89	9.0	697	0	3.6
15 16 16b 26 PG	5,900	5.4	0	5.4	4.7	89	7.4	695	0	2.9
15 16 16b 25	4,700	7.6	0	7.6	4.7	97	6.6	733	0	2.6
15 16 16b 25 PG	5,900	6.8	0	6.8	4.8	95	5.5	724	0	2.2
15 16 16b 25 26	5,900	7.2	0	7.2	4.6	95	8.3	724	0	3.3
15 16 16b 25 26 PG	7,100	6.6	0	6.6	4.7	94	7.1	718	0	2.8
15 16 16b 22	4,700	7.0	0	7.0	4.3	95	6.6	747	0	2.6
15 16 16b 22 PG	5,900	6.3	0	6.3	4.5	94	5.5	735	0	2.2
15 16 16b 22 26	5,900	6.7	0	6.7	4.3	93	8.3	735	0	3.3
15 16 16b 22 26 PG	7,100	6.1	0	6.1	4.5	92	7.1	727	0	2.8
15 16 16b 22 25	5,900	8.1	4	8.0	4.4	99	6.4	764	220	2.5
15 16 16b 22 25 PG	7,100	7.4	0	7.4	4.5	98	5.5	752	0	2.2
15 16 16b 22 25 26	7,100	7.6	0	7.6	4.4	97	7.8	752	0	3.1
15 16 16b 22 25 26 PG	8,300	7.1	0	7.1	4.5	96	6.8	742	0	2.7
Note:										
* - Assuming 60% of Cr is removed from the water										
PG - Pecan Groves Replacement Well										

ensure nitrate level of 8 mg/L or less.

- The highest nitrate level occurs only when Well 25 is in service.

For the maximum treated flow and high nitrate level conditions obtained from the matrix, a mass balance of nitrate in the treatment process was calculated. The calculation resulted in choosing the combined well flow of 3,050 gpm and treated flow of 1,460 gpm. It was also observed that the blending combination reduced Cr-VI and arsenic levels below 10 ppb.

6.2.1 Treatment Technologies

There are several treatment technologies available for nitrate removal. The following four technologies are considered as the most appropriate for the City based on experiences from other similar projects:

Alternative 1 - IX using Nitrate Selective Resin
Alternative 2 - IX using Standard Anion Exchange Resin
Alternative 3 - Reverse Osmosis
Alternative 4 - Biological Nitrate Removal

These technologies are further discussed in the following sections. Each technology has some advantages and disadvantages in comparison to the others. For each technology, capital, annual O&M, and 20 year present worth costs were calculated. The cost evaluation was based on treatment of 1,460 gpm well flow and 20% well utilization rate. The 20-year present worth cost was calculated by using an interest rate of 5%. A cost comparison is presented for these treatment technologies. Based on cost and feasibility, one of these technologies was recommended for the nitrate treatment at CBS.

6.2.1.1 Alternative 1 - IX using Nitrate Selective Resin

Ion exchange (IX) processes can remove inorganic contaminants, such as nitrate, sulfate, hardness, arsenic, uranium, and chromium. From a nitrate removal perspective, these resins can be classified as sulfate-selective resins (SSR, known as standard IX resin) and nitrate-selective resins (specialty IX resin). Nitrate-selective resins (NSR) have special macroporous and hydrophobic chemical structure that prefers nitrate over sulfate. The selectivity sequence for nitrate selective resins is nitrate> sulfate> arsenate> chloride> bicarbonate. Nitrate selective resins are generally 10-20% more expensive than standard IX resins.

The IX process typically composes of the following operational modes:

1. Exhaustion/Service
2. Backwash
3. Regeneration
4. Slow Rinse
5. Fast Rinse

Service is in a downflow mode, backwash is in an upflow mode, and regeneration and rinsing is in a downflow mode. When the capacity of the IX bed is exhausted, the column is removed from service and regenerated. Regeneration is performed using sodium chloride solution. The disposal

of spent brine (high concentrations of nitrate, arsenic, TDS and other contaminants) is an important issue for all IX applications in water treatment. The spent brine can generally be evaporated using a lined brine pond or be disposed off-site to a landfill or liquid waste disposal facility.

6.2.1.1.1 Conceptual Design

The design for developing cost estimates is based on the treatment of combined well flow of Wells 15, 22 and 25 (critical condition from Matrix Table). A partial flow of 1,460 gpm was considered for this design with an influent nitrate level of 12.5 mg/L.

The NSR IX treatment system involves four vessels operating in parallel (two in operation, one in regeneration and one in standby) for a partial treatment system flow rate of 1,460 gpm. The schematic for a four vessel IX system is shown in Figure 6.4. A summary of the above treatment configuration option in terms of design criteria, treatment, operations, and residuals handling is presented in Table 6.7.

Table 6.7 : Design Criteria for NSR IX System

Parameter	Units	Value
Treated Flow	gpm	1,460
Influent Nitrate Level	mg/L	12.5
No. of Treatment Vessels	–	4 (2 in operation; 1 regeneration; 1 standby)
Hydraulic Loading Rate	gpm/ft2	9.6
EBCT (each vessel)	Minutes	2
Vessel Diameter	feet	10
Media Depth	feet	2.6
Treated Flow	BVs	307
Operating Pressure	psi	20-30
Run Length	Hours	10.2
Backwash Flow	BVs	2
Backwash Duration	Minutes	5
Regeneration Flow	BVs	2.2
Regeneration Duration	Minutes	41
Slow Rinse Flow	BVs	2
Slow Rinse Duration	Minutes	20
Fast Rinse Flow	BVs	4
Fast Rinse Duration	Minutes	10
Spent Brine Disposal	–	Landfill

For a 1,460 gpm treatment facility, the design flow rate through the treatment system is 1,460 gpm. Two vessels in operation, one in regeneration, and one in standby are recommended. No pH adjustment is needed for IX. The vessel diameter is 10.0 feet, based on the system flow and a hydraulic loading rate (HLR) of 9.6 gpm/ft^2. The resin media depth in the vessel is 2.5 feet, and the EBCT in each vessel is 2 minutes. After a nitrate/sulfate breakthrough, the resin in the vessel is backwashed, regenerated using sodium chloride (brine), and rinsed. The backwash, and rinse volume is approximately 25,000 gallons (8 BVs). Spent brine is collected in a tank and reused for another regeneration cycle before disposal.

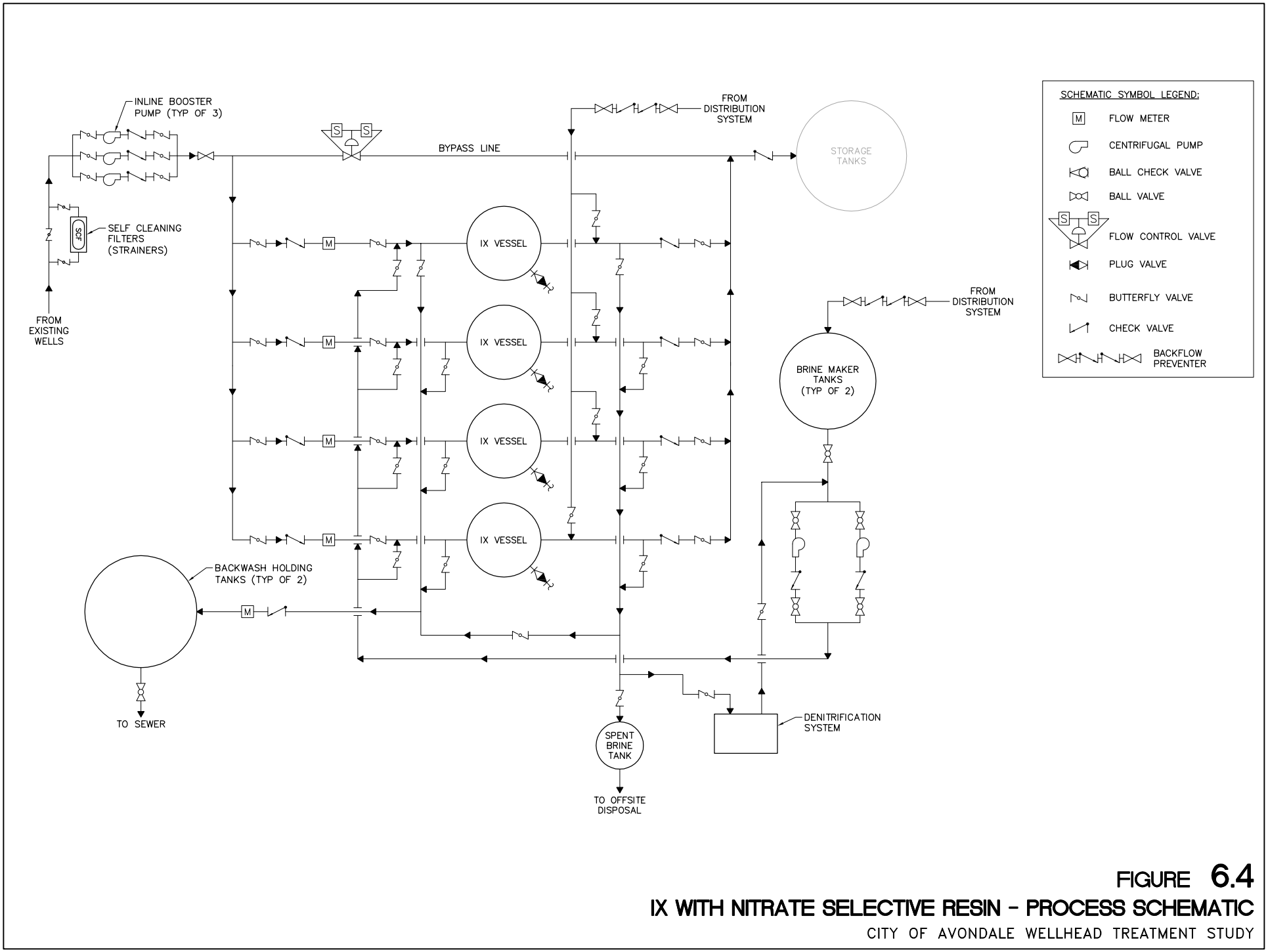

FIGURE 6.4

IX WITH NITRATE SELECTIVE RESIN - PROCESS SCHEMATIC

CITY OF AVONDALE WELLHEAD TREATMENT STUDY

NCS Engineers

Aug 28, 2013 - 4:26pm
Z:\0445 - City of Avondale - Wellhead Treatment Study\CAD\Draft Final Report\FIGURE 6.4 - IX WITH NITRATE SELECTIVE RESIN PROCESS SCHEMATIC.dwg

6.2.1.1.2 Residuals Handling

The spent backwash, slow rinse effluent, and fast rinse effluent from an IX facility can be equalized and sent to the City sewer system (TDS is much lower than 10,000 mg/L). Spent brine from the IX process could be hauled either to a solid waste landfill or to an evaporation pond operated by the City. The spent brine is required to pass the TCLP test to be classified as a non-hazardous waste.

The residuals from an IX system only contain dissolved constituents (no suspended matter). Therefore, to classify residuals as a non hazardous waste, the concentration of the dissolved constituents needs to be below the RCRA limits.

During this study, the characterization of brine with dissolved constituents was estimated and is presented in Table 6.8. The table shows the estimated arsenic, nitrate, total chromium, and TDS concentrations in the spent brine. The concentrations of total chromium and arsenic are less than 5 mg/L in the spent brine. The brine does not appear to be a hazardous waste and could be disposed of to a landfill, or a non-hazardous liquid waste disposal facility.

Table 6.8 : NSR IX System - Spent Brine Characteristics

Parameters	Arsenic mg/L	Nitrate mg/L	Total Chromium mg/L	TDS mg/L
NSR IX System Spent Brine Characteristics	0.9	3,000	1.1	27,909
RCRA TCLP Limits	5	NA	5	NA

NA - Not Applicable
RCRA - Resource Conservation Recovery Act

6.2.1.1.3 Cost Basis and Estimate

The basis for developing costs for the NSR IX system is shown below:

- Basis for IX System:
  - Partial stream treatment and blending with raw water.
  - Four carbon steel, epoxy coated pressure vessels with NSR.
  - 500 micron strainer.
  - Stainless steel internal headers and underdrains in pressure vessels.
  - Two backwash holding tanks of 20,000 gallons capacity each.
  - Spent brine disposal to a landfill.
  - One 50 ton brine maker tank.
- Power costs of $0.10/kWh.
- Labor charges of $30 to $50 per person per hour based on expertise.
- Contingencies and allowances:
  - 20% for contingencies.
  - 40% for piping, instrumentation and controls, and electrical allowance.
  - 15% for design and construction management services.
  - 8.5% for taxes, insurance, and bonding.

Based on the above design criteria, the estimated capital and annual O&M costs for a NSR IX system with a treated flow rate of 1,460 gpm and an average well utilization rate of 20% are $3.4 million and $282,900, respectively. The 20-year present worth cost is estimated at $6.9 million. A breakdown of the capital and annual O&M costs are presented in Table 6.9.

6.2.1.2 Alternative 2 - IX using Standard Anion Exchange Resin

The sulfate selective resin (or standard anion resin) is the most widely used IX resin for nitrate treatment. Based on the active functional group and polymer matrix structure, SSR can be further classified as Type 1 or 2 resins. The SSR prefers sulfate over nitrates and other anions such as arsenate, bicarbonate, and chloride. The selectivity sequence for sulfate selective resins is sulfate> arsenate> nitrate> chloride> bicarbonate.

The treatment process using SSR is similar to NSR as described in Section 6.2.1.1.

6.2.1.2.1 Conceptual Design

The treatment of partial flow of combined well flow for Wells 15, 22 and 25 (critical condition from Matrix Table) is the critical flow condition. The SSR IX treatment system would involve four vessels (two in operation, one in regeneration, and one in standby) with a partial treatment system flow rate of 1,460 gpm. The schematic for a four vessel IX system is shown in Figure 6.5. A summary of the above treatment configuration option in terms of design criteria, treatment, operations, and residuals handling is presented in Table 6.10.

Table 6.10 : Design Criteria for SSR IX System

Parameter	Units	Value
Treated Flow	gpm	1,460
Influent Nitrate Level	mg/L	12.5
No. of Treatment Vessels	–	4 (2 in operation; 1 regeneration; 1 standby)
Hydraulic Loading Rate	gpm/ft^2	9.6
EBCT (each vessel)	Minutes	2
Vessel Diameter	feet	10
Media Depth	feet	2.6
Treated Flow	BVs	217
Operating Pressure	psi	20-30
Run Length	Hours	7.2
Backwash Flow	BVs	2
Backwash Duration	Minutes	5
Regeneration Flow	BVs	2.2
Regeneration Duration	Minutes	41
Slow Rinse Flow	BVs	2
Slow Rinse Duration	Minutes	20
Fast Rinse Flow	BVs	4
Fast Rinse Duration	Minutes	10
Spent Brine Disposal	–	Landfill

For a 1,460 gpm treatment facility, the design flow rate through the treatment units is 1,460 gpm. Two vessels in operation, one in regeneration, and one standby are recommended. No pH adjustment is required for IX. The vessel diameter is 10.0 feet based on the system flow and a HLR

Table 6.9 : NSR IX System Capital and Annual O&M Costs

Capital Cost

Inline Strainers Installed	$58,500
Inline Booster Pumps Installed	$90,000
IX System Installed	$1,101,200
Brine Maker Tank Installed	$75,600
Spent Brine Handling System Installed	$20,400
Denitrification System Installed	$240,000
Backwash Holding Tank Installed	$52,200
Estimated IX Treatment Cost	$1,637,900
Piping, I&C, and Electrical Allowance (40%)	$655,200
Sub Total 1, $	$2,293,100
Contingency (20%)	$458,600
Sub Total 2, $	$2,751,700
Taxes, Insurance, & Bonding (8.5%)	$233,900
Sub Total 3, $	$2,985,600
Design and CM Fee (15%)	$447,800
Capital Cost	**$3,433,400**

Annual O&M Cost (at 20% Well Utilization Rate)

Annual Power Cost, $/yr	$3,900
Annual Salt Cost, $/yr	$6,000
Salt Delivery Fee, $/yr	$1,300
Annualized Resin Replacement Cost, $/yr	$32,700
Brine Disposal Cost, $/yr	$67,100
Annual O&M for Denitrification System, $/yr	$20,000
Total Estimated Labor Cost, $/yr	$83,200
Equipment Maintenance Cost, $/yr	$68,700
Annual O&M Cost, $/yr	**$282,900**

20-year Present Worth Cost, $	**$6,958,000**

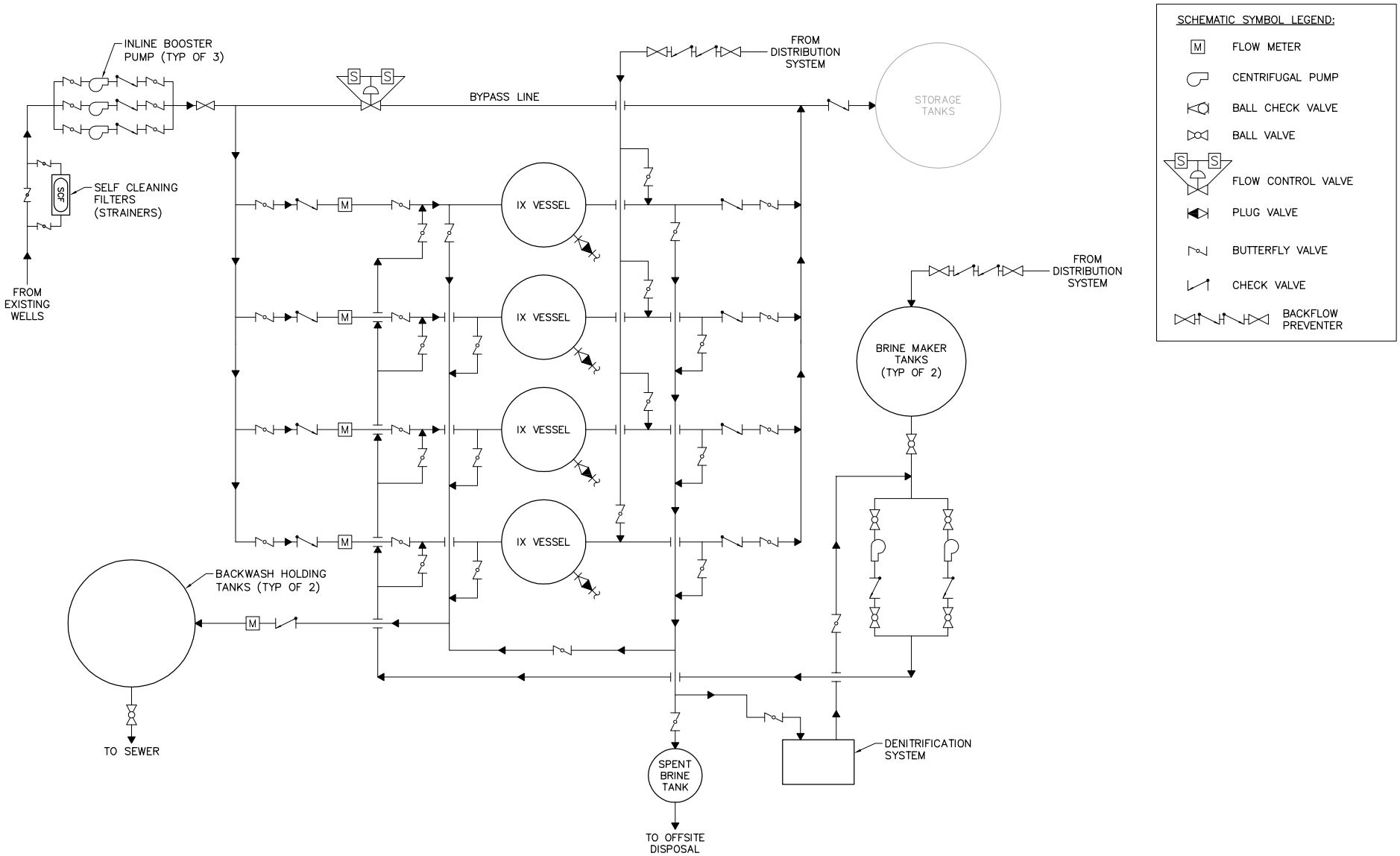

FIGURE 6.5

IX WITH STANDARD ANION RESIN - PROCESS SCHEMATIC

CITY OF AVONDALE WELLHEAD TREATMENT STUDY

NCS Engineers

Aug 28, 2013 - 4:27pm
Z:\0445 - City of Avondale - Wellhead Treatment Study\CAD\Draft Final Report\FIGURE 6.5 - IX WITH STANDARD ANION RESIN PROCESS SCHEMATIC.dwg

of 9.6 gpm/ft^2. The resin media depth in the vessel is 2.5 feet, and the EBCT in each vessel is 2 minutes. After a nitrate/sulfate breakthrough, the resin in the vessel is regenerated using sodium chloride. The resin is backwashed, regenerated, and rinsed. The backwash, and rinse volume is approximately 25,000 gallons (8 BVs). Spent brine is collected in a tank and reused for another regeneration cycle before it is disposed to a landfill after it is determined to be non hazardous.

6.2.1.2.2 Residuals Handling

The residual handling approach for SSR is the same as for NSR as described in Section 6.2.1.1.2. For this alternative the characterization of brine with dissolved constituents are estimated and are presented in Table 6.11. The table shows the anticipated arsenic, nitrate, total chromium, and TDS concentrations in the spent brine. The concentrations of total chromium and arsenic are estimated to be less than 5 mg/L in the spent brine. The brine does not appears to be a hazardous waste and could be disposed to a landfill or non-hazardous liquid waste facility.

Table 6.11 : SSR IX System - Spent Brine Characteristics

Parameters	Arsenic mg/L	Nitrate mg/L	Total Chromium mg/L	TDS mg/L
SSR IX System Spent Brine Characteristics	0.7	2,121	0.8	19,727
RCRA TCLP Limits	5	NA	5	NA

NA - Not Applicable
RCRA - Resource Conservation Recovery Act

6.2.1.2.3 Cost Basis and Estimate

The assumptions used to develop costs for the SSR IX system are similar to those used for NSR IX system described in Section 6.2.1.1.3. Based on the above design criteria, the estimated capital and annual O&M costs for a SSR IX system with a treated flow rate of 1,460 gpm and an average well utilization rate of 20% are $3.2 million and $302,300, respectively. The 20-year present worth cost is estimated at $7.0 million. A breakdown of the capital and annual O&M costs are presented in Table 6.12.

6.2.1.3 Alternative 3 - Reverse Osmosis System

The reverse osmosis (RO) process, discussed in Chapter 5, can be used for nitrate removal. However, this system is not considered for nitrate treatment alone, as it has several limitations as compared to IX and will not be cost effective compared to IX and poses brine disposal concerns. If TDS removal is desired along with nitrate removal, then RO system could be considered.

6.2.1.4 Alternative 4 - Biological Nitrate Removal Technology

MB-N2 Technology developed by Microvi Biotechnologies Inc., is a new nitrate removal technology which degrades nitrate in water to nitrogen gas within minutes without producing any waste. This technology is based on an advanced biocatalyst that re-creates the natural habitat of powerful, naturally-occurring nitrate-degrading microorganisms in a reactor. When the raw water is passed through the bio-catalyst reactors, the nitrate present in the water is degraded by microorganisms present in the catalysts to nitrogen gas. The nitrogen gas is a safe and harmless byproduct. This

Table 6.12 : SSR IX System Capital and Annual O&M Costs

Capital Cost

Inline Strainers Installed	$58,500
Inline Booster Pumps Installed	$90,000
IX System Installed	$986,900
Brine Maker Tank Installed	$105,600
Spent Brine Handling System Installed	$27,600
Denitrification System Installed	$240,000
Backwash Holding Tank Installed	$52,200
Estimated IX Treatment Cost	$1,560,800
Piping, I&C, and Electrical Allowance (40%)	$624,300
Sub Total 1, $	$2,185,100
Contingency (20%)	$437,000
Sub Total 2, $	$2,622,100
Taxes, Insurance, & Bonding (8.5%)	$222,900
Sub Total 3, $	$2,845,000
Design and CM Fee (15%)	$426,800
Capital Cost	**$3,271,800**

Annual O&M Cost (at 20% Well Utilization Rate)

Annual Power Cost, $/yr	$3,900
Annual Salt Cost, $/yr	$8,500
Salt Delivery Fee, $/yr	$1,900
Annualized Resin Replacement Cost, $/yr	$24,500
Brine Disposal Cost, $/yr	$94,900
Annual O&M for Denitrification System, $/yr	$20,000
Total Estimated Labor Cost, $/yr	$83,200
Equipment Maintenance Cost, $/yr	$65,400
Annual O&M Cost, $/yr	**$302,300**

20-year Present Worth Cost, $	**$7,038,000**

technology was pilot tested at the Sunny Slope Water Company, CA and a full scale system is currently being installed. The technology was tested in three different scenarios and the results are presented in Table 6.13 (Source: Microvi Biotechnologies, Inc.).

Table 6.13 : MB-N2 Nitrate Removal Technology - Case Study Results

Parameters	Case 1	Case 2	Case 3
Influent Nitrate, ppm	10	40	570
Effluent Nitrate, ppm	1.3	1.6	10
Hydraulic Retention Time, min	3	5.1	20
Loading Rate, (grams N/liter/day)	4.8	11.4	43.5

6.2.1.4.1 Conceptual Design

For a partial flow condition, a biological nitrate removal system utilizing two bio reactors in parallel, treating half of the flow in each reactor, is the recommended treatment configuration. The schematic for a twin bio reactor biological nitrate removal system is shown in Figure 6.6. The design criteria for this technology is shown in Table 6.14.

Table 6.14 : Design Criteria for Biological Nitrate Removal Technology

Parameter	Units	Value
Treated Flow	gpm	1460
Influent Nitrate Level	mg/L	10.8
Prefilter Size	microns	30
Acetic Acid Concentration	%	50%
Reactor Volume	ft3	3945
Number of Reactors	-	2 (Operate in parallel)
Superficial Velocity	ft/min	0.8
EBCT (each reactor)	Minutes	18.2
Post Filter Size	microns	5
Chlorine Dosage	mg/L	1
Bed Cleaning Duration	Minutes	30

Once the raw water is passed through a 30 micron prefilter, acetic acid and nutrients are added to the water prior to entering the biological reactors. Pre-filtration using a cartridge type system, is required to remove sand particles or dirt that may foul the bio-catalyst in the reactors. Acetic acid and nutrients are added to enhance nitrate degradation and longevity of the bio catalyst respectively. Nutrient dosage depends on acetic acid dosage. The dosage of acetic acid depends on raw water nitrate and dissolved oxygen levels in the water. The fluidized bed reactors contain a biocatalyst media bed which reduces nitrate to nitrogen gas. Treated water is sent to an aeration tank to improve the dissolved oxygen level in the treated water. Water from the aeration tank is passed through a 5 micron filter to reduce the turbidity level in the water. Chlorine is added to the treated water prior to distribution. The fluidized bed in the reactors should be cleaned frequently to improve the performance of the media. The frequency depends on the fluidized bed expansion which is monitored using a level sensor. When the well goes offline, the biocatalyst reactors need to be maintained by running treated water continuously through them using a recycle pump.

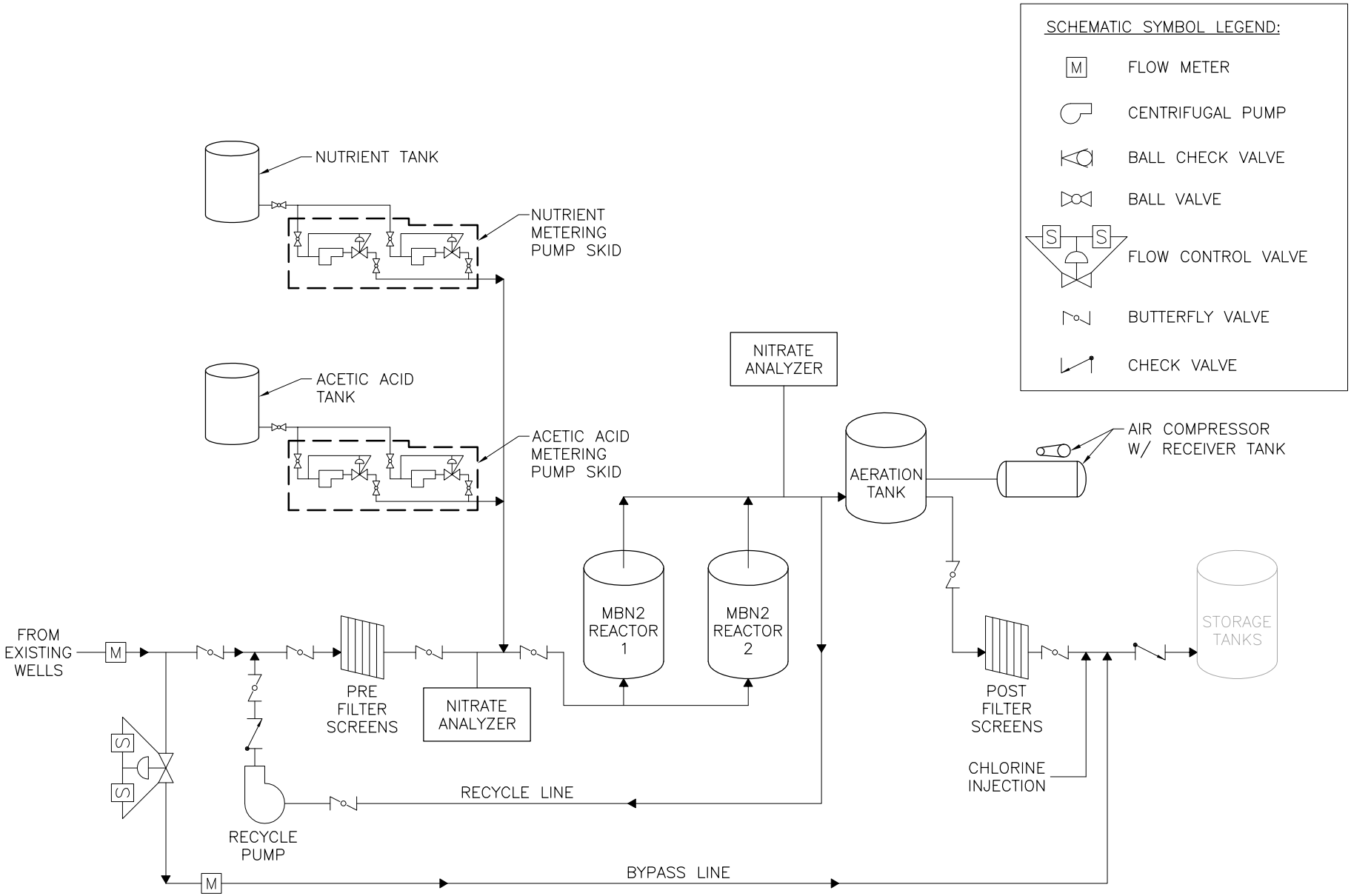

FIGURE 6.6

BIOLOGICAL NITRATE REMOVAL TECHNOLOGY - PROCESS SCHEMATIC

CITY OF AVONDALE WELLHEAD TREATMENT STUDY

NCS Engineers

Aug 30, 2013 - 3:13pm
Z:\0445 - City of Avondale - Wellhead Treatment Study\CAD\Draft Final Report\FIGURE 6.6 - PROCESS SCHEMATIC OF BIOLOGICAL NITRATE REMOVAL TECHNOLOGY.c

6.2.1.4.2 Cost Estimate

Based on the above presented design criteria and the cost assumptions discussed earlier, the estimated capital and annual O&M costs for a biological nitrate removal technology with a flow rate of 1,460 gpm and an average well utilization rate of 20% are $3.6 million and $263,800, respectively. The 20-year present worth cost is $6.8 million. A breakdown of the capital and annual O&M costs is presented in Table 6.15.

6.2.2 Cost and Non-Cost Comparison of Technologies

For cost comparison, Alternatives 1, 2 and 4 were considered. Alternative 3 was not considered for the CBS site for the reasons discussed earlier. The capital, annual O&M, and 20-year present worth costs for Alternatives 1, 2, and 4 are presented in Table 6.16. Alternative 4 - Biological Nitrate Removal has the lowest annual O&M cost ($263,800) and 20-year present worth cost ($6.8 million). However, this technology is fairly new and should be pilot tested before considering it for the final recommendation. Alternative 1 - IX system with NSR is the second most economical option and has a 20-year present worth cost of $6.9 million. The capital and annual O&M costs for Alternative 1 were calculated at $3.4 million and $282,900, respectively.

Table 6.16 : Cost Summary of Treatment Alternatives

Treatment Type	Alternative 1 - IX System w/ NSR Resin	Alternative 2 - IX System w/ SSR Resin	Alternative 4 - Biological Nitrate Removal
Treatment Flow Rate (gpm)	1,460	1,460	1,460
Capital Cost	$3,433,400	$3,271,800	$3,562,100
Annual O&M Cost	$282,900	$302,300	$263,800
20-year Present Worth Cost	$6,958,000	$7,038,000	$6,849,000

Based on non cost factors, both Alternatives 1 and 2 require spent brine disposal facilities. Alternative 4 does not require any waste handling, however does require maintenance even when the wells are offline. Alternative 4 is a less proven technology with more uncertainties.

For the CBS nitrate treatment facility, it is recommended to pilot test both biological nitrate removal and IX with NSR. The final selection of technology will be dependent on the pilot study test results. Pilot testing can also consider electrolytic brine denitrification and brine reuse, to reduce disposal costs. For capital improvement budgeting purposes, Alternative 1 - IX system with NSR is considered as the recommended treatment option. Figures 6.4 and 6.7 present the process schematic and site plan, respectively, for the NSR IX technology.

Per discussion with the City, it was determined that three water storage tanks will be needed at CBS at build-out, instead of four as previously estimated. Accordingly, the future tank planned for the northeast corner of the site has been removed from Figure 6.7.

6.2.3 Recommended Technology

For capital improvement and budgeting purposes, the recommended nitrate treatment alternative is an IX system with NSR. The NSR IX treatment system would consist of four 10 feet diameter vessels, two operating in parallel, one in regeneration, and one standby. Each vessel could treat up

Table 6.15 : Biological Nitrate Removal System Capital and Annual O&M Costs

Capital Cost

Biological System Equipment Cost	$1,000,000
Initial Biocatalyst Cost	$525,000
Installation Cost (20%)	$305,000
Subtotal 1, $	$1,830,000
Piping, I&C, and Electrical Allowance (30%)	$549,000
Subtotal 2, $	$2,379,000
Contingency (20%)	$475,800
Subtotal 3, $	$2,854,800
Taxes, Insurance, & Bonding (8.5 %)	$242,700
Subtotal 4, $	$3,097,500
Design and CM Fee (15%)	$464,600
Capital Cost	**$3,562,100**

Annual O&M Cost (at 20% Well Utilization Rate)

Annual Power Cost, $/yr	$8,000
Equipment Maintenance Cost, $/yr	$18,300
Chemicals Cost, $/yr	$96,000
Total Estimated Labor Cost, $/yr	$83,200
Media Replacement Cost, $/yr	$58,300
Annual O&M Cost, $/yr	**$263,800**

20-year Present Worth Cost, $	**$6,849,000**

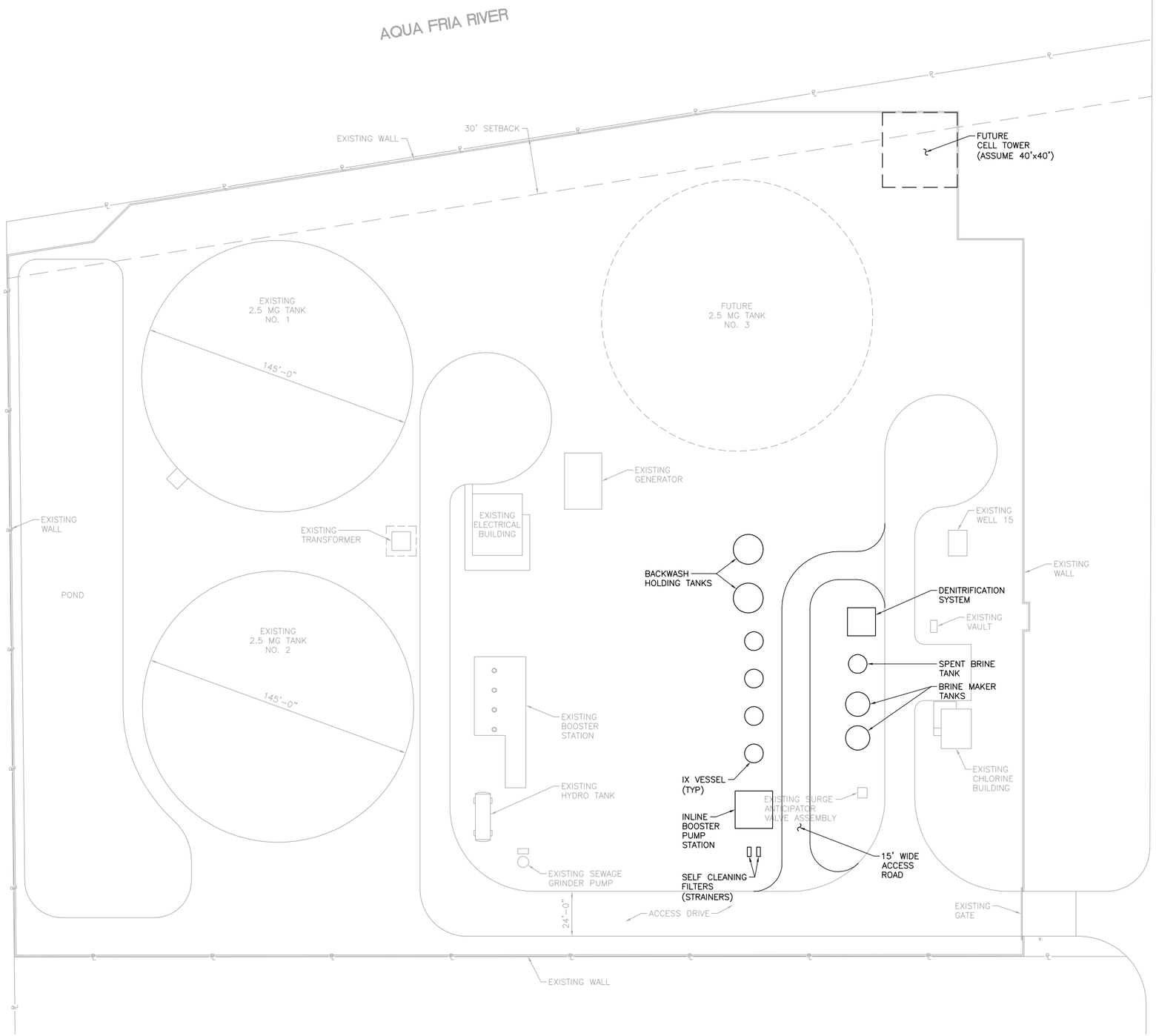

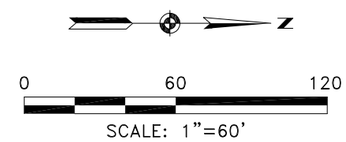

FIGURE 6.7

CBS NITRATE TREATMENT FACILITY SITE PLAN

CITY OF AVONDALE WELLHEAD TREATMENT STUDY

NCS Engineers

Z:\0445 – City of Avondale – Wellhead Treatment Study\CAD\Draft Final Report\FIGURE 6.7 – CBS NITRATE TREATMENT FACILITY SITE PLAN.dwg Aug 28, 2013 – 4:28pm

to a well flow of 730 gpm. Under normal operating conditions, the well flow would be equally divided between the vessels which are in normal operation mode. When the effluent nitrate level in the filter vessel reaches 5 mg/L, the vessel would be backwashed with well water and regenerated with brine solution. The backwash flow through each filter vessel would be 240 gpm; backwash duration would be approximately 5 minutes. After regeneration, the vessel would be rinsed using the well water. After rinsing is complete, the vessel would go into a standby mode. Two 20,000 gallons backwash holding tanks would hold the backwash and rinse water from the vessels, and subsequently discharge to the sewer. The spent brine will be sent to the electrolytic brine denitrification system and the brine could be reused up to 10 times. This is a leading edge technology still at the research stage developed by Severn Trent Services and has been pilot tested at Litchfield Park Service Company "with mixed success". At the complete exhaustion of spent brine it will be sent to the spent brine holding tank followed by disposal to a landfill.

As indicated above, the City should pilot test biological nitrate removal, IX with NSR, and electrolytic brine denitrification. The final selection of technology may change based on the pilot testing results. The cost and duration of pilot testing are estimated at $175,000 and three months, respectively.

At present, CBS receives water from Wells 15, 16, and 25 which corresponds to 4,050 gpm production capacity. Once Wells 16b, 22, 26, and Pecan Groves Replacement Well are connected to the CBS site and the NTF is constructed, it will increase CBS production capacity by 4,250 gpm. The capital and annual O&M costs for the CBS NTF were calculated at $3.4 million and $282,900, respectively. The annual O&M cost was calculated at a 20% well utilization rate. The cost of pilot testing were estimated at $175,000. Therefore, the total capital cost associated with the CBS NTF is $3.6 million ($3.4 million for treatment + $175,000 for pilot testing). The capital and annual O&M costs correspond to $0.59/gpd increase in water capacity and $0.63/1,000 gallons total water produced (only for increase in water capacity), respectively.

It is also recommended the City explore long term solutions for spent brine disposal. One of the long term solutions for brine disposal is constructing the City's own dedicated evaporation pond. At a 20% well utilization rate, the amount of spent brine generated each year at CBS would be approximately 337,500 gallons. It would require approximately 0.5 acres of land for the construction of an evaporation pond with a capital cost of approximately $500,000 ($300,00 for design and construction of evaporation pond + $200,000 for land acquisition).

Among all the CBS wells, two wells (Wells 15 and 26) may have a Cr-VI issue. If the Cr-VI MCL is promulgated and the Cr-VI concentration in these well is above the primary MCL, there are two approaches to address the Cr-VI issue:

- If the proposed nitrate treatment at the CBS is performed using IX with NSR technology, no separate Cr-VI treatment would be required. It is anticipated the proposed IX system would reduce Cr-VI levels below the potential primary MCL.
- If the nitrate treatment at CBS is performed using biological treatment, blending would be a potential solution for addressing the Cr-VI issue.

CITY OF AVONDALE
WELLHEAD TREATMENT STUDY

FINAL REPORT

CHAPTER 7 - TREATMENT OPTIONS FOR DEL RIO BOOSTER STATION

TABLE OF CONTENTS

7.0 INTRODUCTION 7-1

7.1 POTENTIAL WATER QUALITY ISSUES 7-1

7.2 IRON TREATMENT TECHNOLOGY ALTERNATIVES 7-2
- 7.2.1 Iron Treatment Alternative 1 - Chlorination with Catalytic Media Filtration 7-3
- 7.2.2 Iron Treatment Alternative 2 - Greensand Media Filtration 7-4
- 7.2.3 Iron Treatment Alternative 3 - Aeration/Filtration 7-5

7.3 COST AND NON-COST COMPARISON 7-6

7.4 RECOMMENDED ALTERNATIVE 7-6

7.5 SUMMARY AND CONCLUSIONS 7-7

7.6 RECOMMENDATIONS 7-8

CITY OF AVONDALE
WELLHEAD TREATMENT STUDY

FINAL REPORT

CHAPTER 7 - TREATMENT OPTIONS FOR DEL RIO BOOSTER STATION

LIST OF FIGURES

Figure 7.1 CCMF Process Schematic . . . . . After 7-3

Figure 7.2 Greensand Media Filtration Process Schematic . . . . . After 7-4

Figure 7.3 Aeration Filtration Process Schematic . . . . . After 7-5

Figure 7.4 DBS Treatment Process Schematic . . . . . After 7-6

Figure 7.5 DBS Conceptual Site Plan . . . . . After 7-6

LIST OF TABLES

Table 7.1 Del Rio Booster Station Water Quality Data - Spring 2013 . . . . . After 7-1

Table 7.2 CCMF System Capital and Annual O&M Costs . . . . . After 7-3

Table 7.3 Greensand Media Filtration Capital and Annual O&M Costs . . . . . After 7-4

Table 7.4 Aeration/Filtration Capital and Annual O&M Costs . . . . . After 7-5

Table 7.5 Cost Comparison of Technologies . . . . . After 7-6

Table 7.6 Non Cost Comparison of Technologies . . . . . After 7-6

Table 7.7 RO with CCMF System Capital and Annual O&M Costs . . . . . After 7-6

CITY OF AVONDALE
WELLHEAD TREATMENT STUDY

FINAL REPORT

CHAPTER 7 - TREATMENT OPTIONS FOR DEL RIO BOOSTER STATION

7.0 INTRODUCTION

The Del Rio Booster Station (DBS), also known as EPDS 9, has been offline for several years due to poor water quality associated with Wells 21 and 28 that feed the site. Wells 21 and 28 produce at 1,200 and 900 gpm, respectively. Well 28 is a SRP owned shared well. Well 21 has elevated levels of nitrate, TDS, and iron. Well 21 also has manganese levels slightly above the secondary MCL. Well 28 has an elevated level of TDS, and marginal nitrate levels just below the primary MCL. This chapter discusses water quality issues and treatment alternatives for the DBS. Both cost and non cost factors were considered for each treatment alternate to select the most viable treatment technology for removal of TDS, nitrate, and iron.

7.1 POTENTIAL WATER QUALITY ISSUES

The DBS can be operated under three different scenarios: (1) Wells 21 and 28 are running together, (2) Well 21 is running alone, or (3) Well 28 is running alone. Table 7.1 shows the flow and water quality data for Wells 21 and 28. It also provides combined flow weighted average water quality data for the two wells operating together. Well 21 has a nitrate level of 10.6 mg/L, an iron level of 2.55 mg/L, and a TDS level of 1,530 mg/L. These levels are above the primary MCL of nitrate (10 mg/L), and secondary MCLs of iron (0.30 mg/L) and TDS (500 mg/L). Well 28 has a nitrate level of 8.5 mg/L, an iron level of 0.15 mg/L, and a TDS level of 1,560 mg/L. This shows Well 28 has a TDS level above the secondary MCL and a nitrate level marginally below the primary MCL. For this study, the City's internal goal for TDS in potable water is 750 mg/L. The water quality data shows both Wells 21 and 28 need TDS and nitrate treatment. Well 21 also needs iron treatment. Although the Well 28 iron level is below the secondary MCL, this well may need iron treatment depending on the type of TDS treatment technology used. For the purpose of treatment calculations, it was assumed that 55% of the total hardness was due to calcium, and the rest was due to magnesium. This assumption was based on milliequivalent concentration of calcium and magnesium present in the well water. It was also assumed the well water temperature is 28°C.

High TDS levels and the corresponding impact on the water system and its customers are discussed in Chapter 5. Similar to TDS, iron is not a primary contaminant, and is not regulated by the USEPA. However, high levels of iron in potable water are undesirable due to aesthetic effects (like color and staining). Also, high iron and manganese levels in the distribution system water promote growth of crenoforms (gelatinous string-like microscopic organisms). These crenoforms congregate in the piping to form heavy, jelly-like, stringy masses that can impede the carrying capacity of the distribution system piping. High iron and manganese levels in the distribution system also cause a reduction in residual disinfectant levels in the distribution system which can increase the potential for microbiological activity and potential health risks.

Table 7.1 : Del Rio Booster Station Water Quality Data - Spring 2013

Parameter	Unit	Primary MCL	Secondary MCL or (City Goal)	Well 21	Well 28[i]	Combined Flow Weighted Average Water Quality
Flow Rate	gpm			1,200	900	2,100
Arsenic	ppb	10	NA	2.2	3	2.5
Nitrate	mg/L	10	NA	10.6	8.5	9.7
Chromium, Total	ppb	100	NA	11	21	15.1
Chromium-VI	ppb	NA	NA	6	< 10	5.6[ii]
Sulfate	mg/L	NA	250	172	206	186
TDS	mg/L	NA	500 (750)	1530	1,560	1,543
Iron	mg/L	NA	0.3	2.55	0.15	1.5
Manganese	mg/L	NA	0.05	0.06	< 0.01	0.04[iii]
pH	Std Unit	NA	6.5 to 8.5	7.6	8.0	7.8
Phosphorous	mg/L	NA	NA	< 0.05	Not Available	-
Vanadium	ppb	NA	NA	8	12	9.7
Calcium[v]	mg/L	NA	NA	187	138	166
Magnesium[v]	mg/L	NA	NA	93	69	82
Alkalinity as CaCO3	mg/L	NA	NA	148	93	124
Calcium Hardness as CaCO3[iv]	mg/L	NA	NA	468	345	415
Magnesium Hardness as CaCO3[iv]	mg/L	NA	NA	382	283	339
Hardness as CaCO3	mg/L	NA	(250)	850	628	755
Silica	mg/L	NA	NA	20	18	19
DBCP	ppb	0.2	NA	Not Available	< 0.02	-
Temperature[vi]	^{o}C			28	28	28

Notes:

NA: Not Applicable

i. Well is owned by SRP. Well 28 water quality data is average of two sampling events (October 9, 2008 and September 16, 2010).
Flow provided by City based on ADWR records.
Chromium-VI data is obtained from September 16, 2010 sampling.

ii. For calculation purposes, it is assumed that Well 28 chromium-Vi level is 5 ppb.

iii. For calculation purposes, it is assumed that Well 28 manganese level is 0.005 mg/L.

iv. For calculation purposes, it is assumed that 55% of the total hardness is due to calcium and the rest is due to magnesium.

v. These concentrations are equivalent to their respective hardness.

vi. For the purpose of RO and EDR projections, the well water temperature is assumed to be $28^{o}C$.

Chapter 5 discussed various TDS treatment alternatives, and recommended reverse osmosis (RO) and electrodialysis reversal (EDR) as the preferred alternatives. These technologies are further evaluated in this section based on pretreatment requirements. It is important to note that both Wells 21 and 28 have approximately the same TDS levels. However, the iron level is much higher in Well 21. Based on a TDS goal of 750 mg/L, the amount of water needing treatment using RO is 1,250 gpm (which is close to the Well 21 flow rate) and using EDR is 1,444 gpm. Depending upon source water quality, both technologies require some kind of pretreatment. In the case of DBS, both the technologies require iron removal as the pretreatment. RO and EDR can handle iron levels up to 0.10 mg/L and 0.30 mg/L, respectively.

Based on iron threshold level and flow to be treated, it was determined that the iron removal facility needs to be designed for Well 21 only. The iron removal facility would operate as follows:

1. Treat Well 21 water only when both wells are running. Well 28 water would bypass both iron and TDS treatment and be blended back with RO permeate.
2. Treat Well 21 water only when this is the only well running. Well 21 water would receive both iron and TDS treatment.
3. Treat Well 28 water only when this is the only well running (as Well 28 has lower flow and iron levels, the iron removal facility designed for Well 21 can handle Well 28). Well 28 would receive both iron and TDS treatment.

Since both TDS treatment technologies would require the same size iron removal facility, it is economical to choose RO for TDS removal. Refer to Chapter 5 for RO and EDR cost details. The capital, and annual operations and maintenance (O&M) costs for the RO system were calculated at $3.7 million and $188,600, respectively. The 20-year present worth cost for the RO system was calculated at $6.0 million. The capital and annual O&M costs for the EDR system were calculated at $6.6 million and $250,700, respectively. The 20-year present worth cost for the EDR system was calculated at $9.8 million.

It is also important to note that both TDS treatment technologies (RO and EDR) reduce nitrate levels significantly, therefore separate nitrate treatment is not required. Sections 7.2 and 7.3 discuss various iron removal treatment technologies available including their design aspects, cost, and non cost factors. Section 7.4 presents total costs for iron and TDS treatment.

7.2 IRON TREATMENT TECHNOLOGY ALTERNATIVES

There are several treatment technologies available for removal of iron from ground water. Based on NCS' experience with other similar projects, the following three treatment technologies were considered as the most appropriate alternatives for iron removal at this site: (a) Chlorination with catalytic media filtration (CCMF), (b) Greensand media filtration (GF system), and (c) Aeration with granular media filtration (AF system). These alternatives are further discussed in the following sections. Each alternative has some advantages and disadvantages in comparison to the others. For each alternative, the capital cost, annual O&M cost, and 20-year present worth costs were calculated. The 20-year present worth costs were calculated using an interest rate of 5%. Both cost and non cost comparisons were performed for the selection of a recommended technology.

7.2.1 Iron Treatment Alternative 1 - Chlorination with Catalytic Media Filtration

In this treatment alternative, the well water is passed though pressure filters containing catalytic media (coated manganese dioxide media). The catalytic media has the capacity to oxidize iron on the media bed itself. The upstream chlorine addition is not necessary, however if performed, it considerably increases the media life and capacity. The media first brings the metals out of the water into a solid form by oxidization and then traps the precipitated particles in the filter bed. The media regenerates its capacity by absorbing oxygen from the water during backwash. This media is capable of removing significant amounts of iron (up to 5 mg/L). It can be used as a stand alone filtration media or as an added layer in a sand or multimedia filter system. During the normal filtration mode, the hydraulic loading rate of the catalytic media filter can be varied from 8 - 10 gallons per minute per square foot (gpm/ft^2). Periodic backwashing is needed to remove precipitated ferric hydroxide. The backwashing is done every 12 - 24 hours at a backwash flow rate of 15 - 25 gpm/ft^2 for 10 minutes. Catalytic filtration media works well in a pH range of 5 - 9 standard units. The recommended empty bed contact time (EBCT) for the media is 2.5 minutes. The headloss through the filter vessels during normal filtration is expected to vary from 5 - 10 pounds per square inch (psi). The headloss during backwash mode is expected to be in the range of 10 - 15 psi. The spent backwash water generated during the backwash cycle would be sent to a backwash holding tank. The backwash water can be recovered using a small plate settler unit and recycled back to the head of the treatment plant. Sludge from the bottom of the plate settler can be removed periodically and sent to an offsite waste handling facility which could be a wastewater treatment plant or solid waste landfill.

Figure 7.1 presents the CCMF system process schematic. The recommended upstream chlorine dose for catalytic media is 1 mg/L. After adding chlorine, water would be passed through a rapid mixer chamber followed by the catalytic media filtration system. Based on a filter loading rate of 8 gpm/ft^2, three 10-foot diameter filters (two in operation, one standby) would be required for treating the 1,250 gpm flow (1,200 gpm of well flow plus 50 gpm of recycle flow). Each filter would be backwashed twice a day at a backwash (BW) flow rate of 20 gpm/ft^2 for 10 minutes followed by a rinse at a flow rate of 8 gpm/ft^2 for 3 minutes. Two backwash holding tanks (BWTs), 21 feet diameter x 16 feet high each, would be provided to hold the spent BW plus filter rinse water. The spent BW water would be passed through a plate settler system for water recovery. Decant water from the plate settler would be sent to the head of the treatment plant at a recycle rate of 50 gpm. Sludge from the bottom of the plate settler would be sent to a sludge pump station. Periodically, sludge would be hauled and disposed to the City's WRF or an offsite waste handling facility. Based on a 1% sludge concentration, the total amount of sludge generated from the plate settler unit would be approximately 654 gallons/day. The filter vessels along with some of the ancillary units would be installed in a building consisting of block walls and a canopy roof. The estimated building size is 70 ft. x 40 ft.

Table 7.2 summarizes the estimated capital, annual O&M, and 20-year present worth costs for the CCMF system. The capital and annual O&M costs are estimated at $2.4 million and $131,000, respectively. The 20-year present worth costs are estimated at $4.1 million.

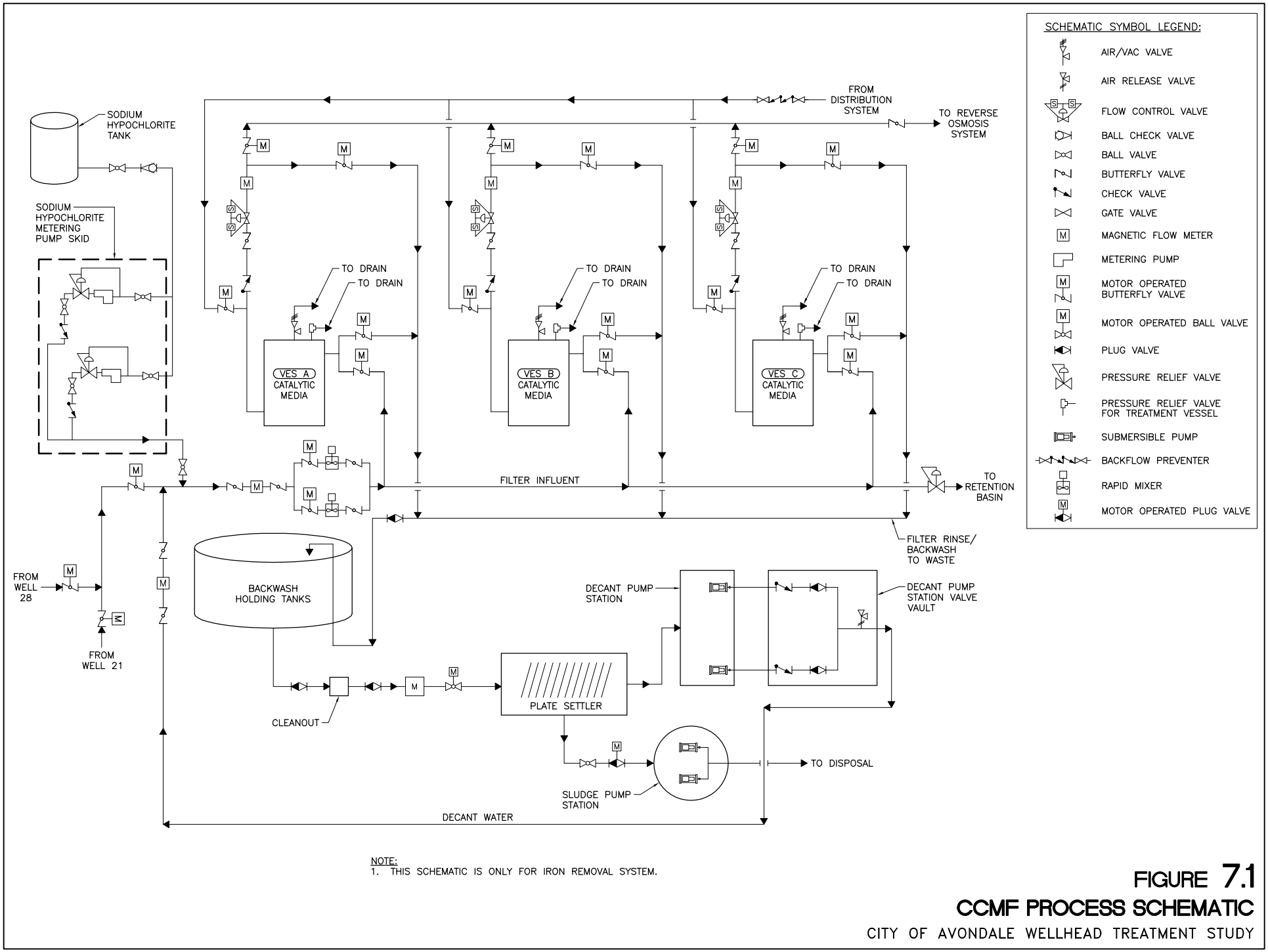

NOTE:
1. THIS SCHEMATIC IS ONLY FOR IRON REMOVAL SYSTEM.

FIGURE 7.1
CCMF PROCESS SCHEMATIC
CITY OF AVONDALE WELLHEAD TREATMENT STUDY

NCS Engineers

Aug 28, 2013 – 4:29pm
Z:\0445 – City of Avondale – Wellhead Treatment Study\CAD\Draft Final Report\FIGURE 7.1 – CCMF PROCESS SCHEMATIC.dwg

Table 7.2 : CCMF System Capital and Annual O&M Costs

Capital Cost

Chlorination System Installed	$30,000
Rapid Mixer System Installed	$72,000
Catalytic Media Filtration System Installed	$751,000
Backwash Holding Tanks Installed	$101,000
Plate Settler Installed	$48,000
Sludge Pump Station Installed	$42,000
Decant Pump Station Installed	$54,000
Equipment Subtotal	$1,098,000
Piping, I&C, and Electrical Allowance (40%)	$439,200
Canopy Structure (Building) Cost	$84,000
Sub Total 1	$1,621,200
Contingency (20%)	$324,200
Sub Total 2	$1,945,400
Taxes, Insurance, & Bonding (8.5%)	$165,400
Sub Total 3	$2,110,800
Design & CM Fee (15%)	$316,600
Capital Cost	**$2,427,000**

Annual O&M Cost (at 26% Well Utilization Rate)

Annual Power Cost, $/yr	$1,400
Chlorine Cost, $/yr	$13,700
Sludge Disposal Cost, $/yr	$32,300
Total Estimated Labor Cost, $/yr	$72,800
Equipment Maintenance Cost, $/yr	$11,000
Annual O&M Cost, $/yr	**$131,000**

20-year Present Worth Cost	**$4,059,000**

7.2.2 Iron Treatment Alternative 2 - Greensand Media Filtration

In this treatment alternative, potassium permanganate is added upstream of the greensand media filter to oxidize iron. There are two methods of operation when using greensand media: the continuous regeneration (CR) process and the intermittent regeneration (IR) process. The CR process is preferred where iron removal is the main objective. This process requires a continuous pre-feed of an oxidant to the source water prior to contact with the filter bed. The IR process is preferred when manganese is the predominant component to be removed. IR is a batch process where oxidation of the manganese occurs directly onto grains of the greensand media. Iron can also be removed via the IR process, however, the iron oxides can foul the media and reduce the oxidation capacity of the greensand media. For DBS iron is the main issue, therefore, CR process is recommended for Alternative 2.

The CR process can remove 15 mg/L or more of soluble iron. When the iron concentration is above 3 mg/L, the loading rate through the filter is generally reduced to 1.5 - 2.5 gpm/ft^2. At this high iron concentration, the filter run length is expected to be in the range of four to six hours. When the iron concentration is less than 3 mg/L, the filter run length is expected to be in the range of 18 to 36 hours at a loading rate of 3 - 6 gpm/ft^2. If high concentrations of iron are being oxidized prior to filtration, capping the filter with anthracite to a depth of 18 inches or greater increases filter run length. The greensand media works best in the pH range of 6.2 to 8.5. The EBCT for the media ranges between 4 to 7 minutes. The backwash flow rate is in the range of 8 - 10 gpm/ft^2. The filter area required for the greensand media treatment technique is relatively high due to longer EBCT and low loading rate.

Figure 7.2 presents the GF system process schematic. The required potassium permanganate dose for the oxidation of 1 mg of iron is 0.94 mg. Therefore, the potassium permanganate demand for Well 21 water would be approximately 2.4 mg/L. After adding potassium permanganate, the water would be passed through a rapid mixer chamber followed by the greensand media filtration system. Based on a filter loading rate of 6 gpm/ft^2, three 12-foot diameter filters (two in operation, one standby) would be required for treating 1,240 gpm flow (1,200 gpm of well flow plus 40 gpm of recycle flow). Each filter would be backwashed twice a day at a backwash flow rate of 10 gpm/ft^2 for 10 minutes followed by a rinse at a flow rate of 6 gpm/ft^2 for 3 minutes. Two backwash holding tanks, 18 feet diameter x 16 feet high each, would be provided to hold the spent BW plus rinse water. The spent BW water would be passed through a plate settler system for water recovery. Decant water from the plate settler would be sent to the head of the treatment plant at a recycle rate of 40 gpm. Sludge from the bottom of the plate settler would be sent to a sludge pump station. Periodically, sludge would be hauled and disposed to the City's WRF or an offsite waste handling facility. Based on a 1% sludge concentration, the total amount of sludge generated from the plate settler unit would be approximately 654 gallons/day. The filter vessels along with some of the ancillary units would be installed in a building consisting of block walls and a canopy roof. The estimated building size is 80 ft. x 45 ft.

Table 7.3 summarizes the estimated capital, annual O&M, and 20-year present worth costs for the greensand media filtration system. The capital and annual O&M costs are estimated at $3.1 million and $140,000, respectively. The 20-year present worth costs are estimated at $4.9 million.

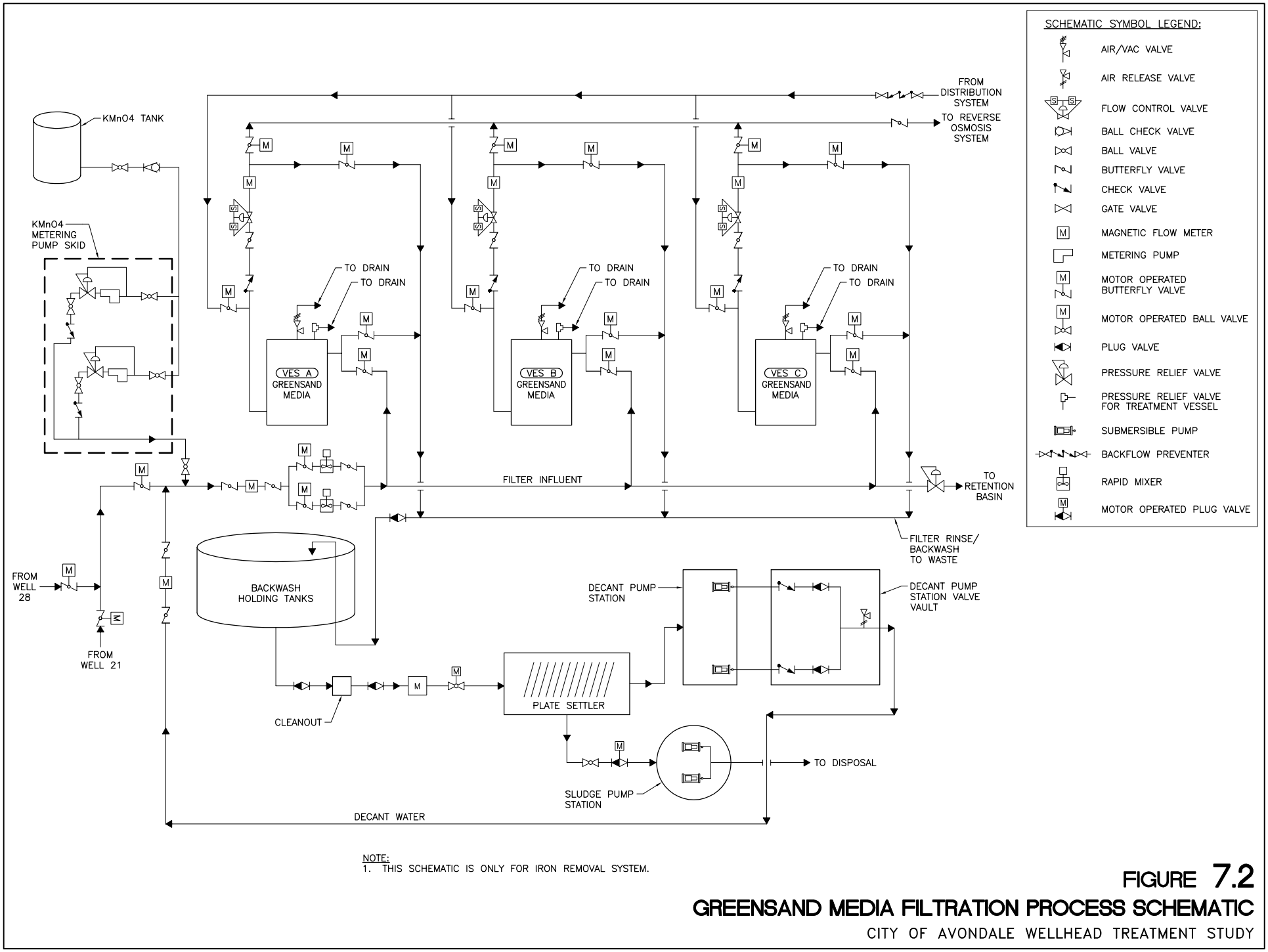

NOTE:
1. THIS SCHEMATIC IS ONLY FOR IRON REMOVAL SYSTEM.

FIGURE 7.2
GREENSAND MEDIA FILTRATION PROCESS SCHEMATIC
CITY OF AVONDALE WELLHEAD TREATMENT STUDY

NCS Engineers

Aug 28, 2013 – 4:30pm
Z:\0445 – City of Avondale – Wellhead Treatment Study\CAD\Draft Final Report\FIGURE 7.2 – GREENSAND PROCESS SCHEMATIC.dwg

Table 7.3 : Greensand Media Filtration Capital and Annual O&M Costs

Capital Cost

KMnO4 System Installed	$27,600
Rapid Mixer System Installed	$72,000
Greensand Media Filtration System Installed	$1,097,000
Backwash Holding Tanks Installed	$77,000
Plate Settler Installed	$48,000
Sludge Pump Station Installed	$42,000
Decant Pump Station Installed	$54,000
Equipment Subtotal	$1,417,600
Piping, I&C, and Electrical Allowance (40%)	$567,000
Canopy Structure (Building) Cost	$108,000
Sub Total 1	$2,092,600
Contingency (20%)	$418,500
Sub Total 2	$2,511,100
Taxes, Insurance, & Bonding (8.5%)	$213,400
Sub Total 5	$2,724,500
Design & CM Fee (15%)	$408,700
Capital Cost	**$3,133,000**

Annual O&M Cost (at 26% Well Utilization Rate)

Annual Power Cost, $/yr	$1,400
KMnO4 Cost, $/yr	$19,700
Sludge Disposal Cost, $/yr	$32,300
Total Estimated Labor Cost, $/yr	$72,800
Equipment Maintenance Cost, $/yr	$14,200
Annual O&M Cost, $/yr	**$140,000**

20-year Present Worth Cost	**$4,877,000**

7.2.3 Iron Treatment Alternative 3 - Aeration/Filtration

Aeration/filtration is another method for iron removal. Iron can be easily oxidized by atmospheric oxygen. Aeration provides dissolved oxygen needed to convert iron from dissolved ferrous to an insoluble ferric state. It generally takes 0.14 mg of dissolved oxygen to oxidize 1 mg of iron. The operations related to the aeration process requires careful control of the water flow through the process. If the water flow becomes too great, not enough air is applied to oxidize the iron. If the flow is too small and the aeration is not cut back, the water can become corrosive. There are two primary ways to provide aeration (either water can be dispersed into the air or air can be bubbled into the water). After the oxidation of the iron, the solids in the water would be allowed to settle, then the water would be filtered to remove the remaining iron precipitate. Due to the low oxidation potential of atmospheric oxygen, oxidation with aeration requires a long detention time (>15 minutes) to allow the reaction to proceed to completion. This requires a fairly large reaction basin.

Figure 7.3 presents the AF system process schematic. For the purpose of cost calculations, diffused aeration was considered as the mode of aeration. Based on a 20 minute detention time, a 16 feet x 16 feet aeration/flocculation basin would be provided. The aeration/flocculation processes would allow iron to react with oxygen to form floc. The flocculated water would then be sent to a plate settler basin. Two plate settler units, operating simultaneously, would be installed in the basin. The plate settler effluent would then flow to a filter feed water basin. The plate settler units would considerably reduce the solids concentration in the plate settler effluent water, thereby reducing the solids loading rate on the downstream filters. Three booster pumps (two in operation, one standby) would be provided to pump water through the filters. Based on a filter loading rate of 8 gpm/ft^2, three 10-foot diameter filters (two in operation, one standby) would be required for treating a 1,220 gpm flow (well flow of 1,200 gpm plus 20 gpm recycle flow). Each filter would be backwashed once a day at a backwash flow rate of 15 gpm/ft^2 for 10 minutes followed by a rinse at a flow rate of 8 gpm/ft^2 for 3 minutes. Two backwash holding tanks, 15 feet diameter x 12 feet high each, would be provided to hold the spent BW plus rinse water. The spent BW water would be passed through the above plate settlers for water recovery. Sludge from the bottom of the plate settlers would be sent to a sludge thickener via sludge pump station. Decant water from the sludge thickener would be recycled back to the aeration/flocculation basin. Thickened sludge from the sludge thickener would be sent to a thickened sludge pump station. Periodically, thickened sludge would be hauled and disposed to the City's WRF or an offsite waste handling facility. Based on a 1% sludge concentration, the total amount of thickened sludge generated from the sludge thickener unit would be approximately 654 gallons/day. The filter vessels along with some of the ancillary units would be installed in a building consisting of block walls and a canopy roof. The estimated building size is 70 ft. x 40 ft.

Table 7.4 summarizes the estimated capital, annual O&M, and 20-year present worth costs for this treatment alternative. The capital and annual O&M costs are estimated at $3.0 million and $146,000, respectively. The 20-year present worth cost is estimated at $4.8 million.

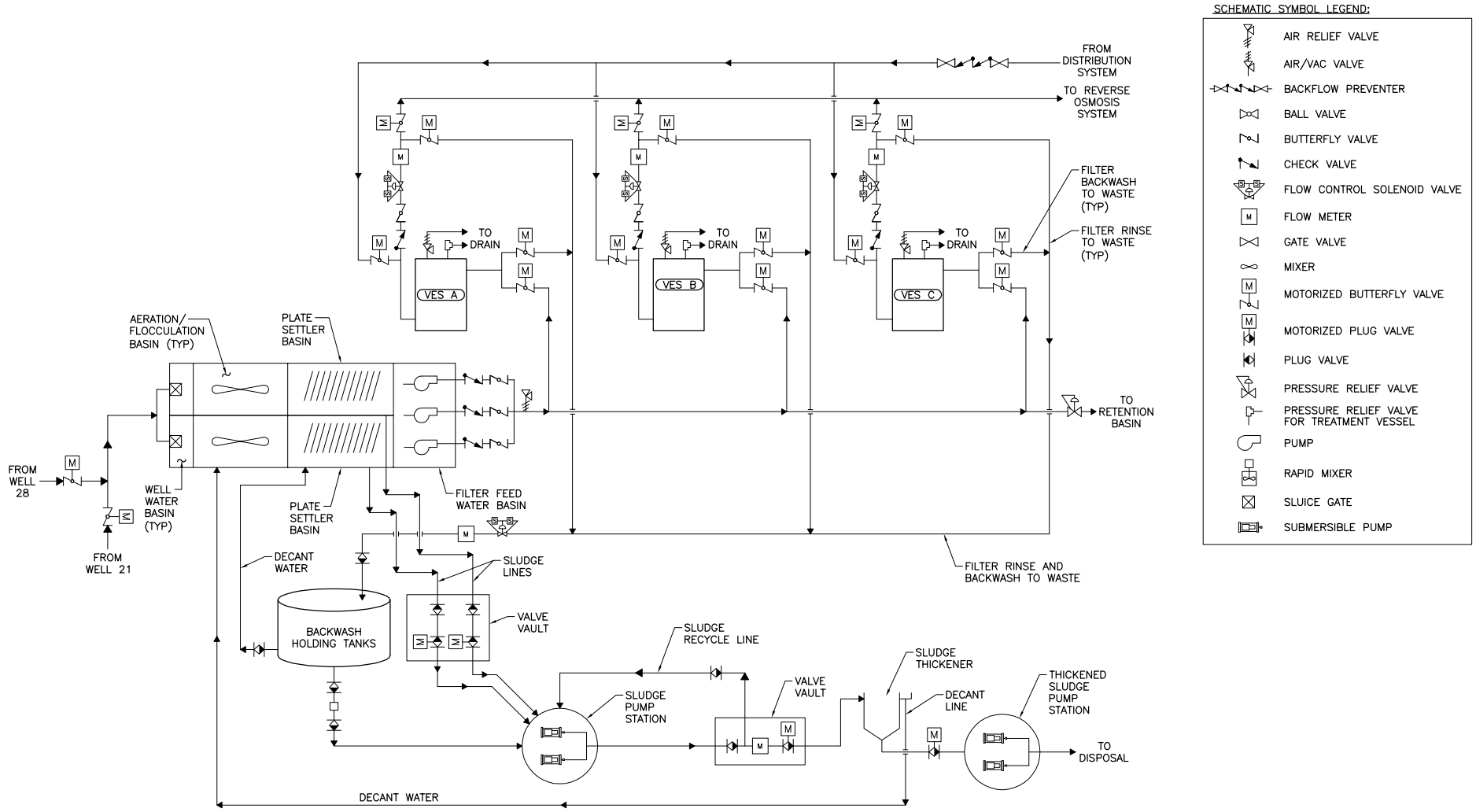

NOTE:
1. THIS SCHEMATIC IS ONLY FOR IRON REMOVAL SYSTEM.

FIGURE 7.3
AERATION FILTRATION PROCESS SCHEMATIC
CITY OF AVONDALE WELLHEAD TREATMENT STUDY

NCS Engineers

Aug 28, 2013 – 4:33pm
Z:\0445 – City of Avondale – Wellhead Treatment Study\CAD\Draft Final Report\FIGURE 7.3 – AERATION PROCESS SCHEMATIC.dwg

Table 7.4 : Aeration/Filtration Capital and Annual O&M Costs

Capital Cost

Well Water Basin Installed	$43,700
Aeration System Installed	$171,800
Plate Settler Installed	$227,000
Booster Pump Station Installed	$100,100
Granular Media Filtration System Installed	$634,000
Backwash Holding Tanks Installed	$38,000
Sludge Pump Station Installed	$42,000
Sludge Thickener + Valve Vault Installed	$61,000
Thickened Sludge Pump Station Installed	$42,000
Equipment Subtotal	$1,359,600
Piping, I&C, Electrical, Yard Piping Allowance (40%)	$543,800
Canopy Structure (Building) Cost	$84,000
Sub Total 1	$1,987,400
Contingency (20%)	$397,500
Sub Total 2	$2,384,900
Taxes, Insurance, & Bonding (8.5%)	$202,700
Sub Total 3	$2,587,600
Design & CM Fee (15%)	$388,100
Capital Cost	**$2,976,000**

Annual O&M Cost (at 26% Well Utilization Rate)

Annual Power Cost, $/yr	$6,100
Sludge Disposal Cost, $/yr	$32,300
Total Estimated Labor Cost, $/yr	$93,600
Equipment Maintenance Cost, $/yr	$13,600
Annual O&M Cost, $/yr	**$146,000**

20-year Present Worth Cost	**$4,795,000**

7.3 COST AND NON-COST COMPARISON

Table 7.5 compares the capital cost, annual O&M cost, and 20-year present worth cost for the evaluated treatment technologies. The 20-year present worth cost for the CCMF system is $4.1 million and is the lowest among the evaluated treatment technologies. The capital cost for the CCMF system was also the lowest at $2.4 million compared to $3.1 million for the GF system and $3.0 million for the AF system. The annual O&M cost for the CCMF system was calculated at $131,000 compared to $140,000 for the GF system and $146,000 for the AF system. Based on the cost comparison, the CCMF system is the most economical alternative for iron treatment.

Besides cost, several non cost factors were considered for the selection of the recommended iron removal technology. Refer to Table 7.6. This table shows that in comparison to the CCMF system, the AF system requires a larger footprint, is more complex to operate, uses more energy, has a higher reaction time, is more sensitive to change in source water quality, and requires more maintenance. Similarly, compared to the CCMF system, the GF system requires a larger footprint and a higher reaction time. Therefore, based on non cost factors, the CCMF system appears to be the most favorable alternative.

7.4 RECOMMENDED ALTERNATIVE

Based on the above discussion, it is recommended to provide a CCMF system for iron removal and a RO system for TDS and nitrate removal at the Del Rio Booster Station. Table 7.7 summarizes the combined capital cost, annual O&M cost, and present worth cost for the recommended treatment alternative. Apart from the iron removal system and the RO system, these combined costs also include costs for inline booster pumps (to pump well water through the iron removal system), a dechlorination system (upstream of the RO system), a post chlorination system (for disinfection purposes), and a sodium hydroxide system (to raise pH of combined treated water to 7.8). The DBS treatment system would produce water at a flow rate of 1,900 gpm. The capital and annual O&M costs for the DBS treatment facilities are estimated at $6.5 million and $459,000, respectively. The 20-year present worth cost is estimated at $12.2 million. Figures 7.4 and 7.5 present the process schematic and conceptual site plan, respectively, for the recommended treatment facilities at DBS. It is important to note that the proposed treatment system can be operated under three different scenarios as follows:

1. Treating Well 21 water only when both the wells are running. Well 28 water would bypass both iron and TDS treatment and blend with RO permeate.
2. Treating Well 21 water only when this is the only well running. Well 21 water would receive both iron and TDS treatment (some of the Well 21 water may bypass both iron and TDS treatment).
3. Treating Well 28 water only when this is the only well running. Well 28 would receive both iron and TDS treatment (some of the Well 28 water may bypass both iron and TDS treatment).

The proposed DBS treatment facility would include the following components:

- A sodium hypochlorite solution tank with two metering skids (one for prechlorination and another for post chlorination).
- Two rapid mixers (one in operation, one standby).
- Three catalytic media filter vessels (two in operation, one standby), each 10-foot diameter.

Table 7.5 : Cost Comparison of Technologies

Treatment Alternatives	Capital Cost	Annual O&M Cost	20-year Present Worth Cost
CCMF System	$2,427,000	$131,000	$4,059,000
Greensand Media Filtration	$3,133,000	$140,000	$4,877,000
Aeration/Filtration	$2,976,000	$146,000	$4,795,000

Table 7.6 : Non Cost Comparison of Technologies

Parameters	CCMF System	Greensand Media Filtration	Aeration/Filtration
Iron Removal Efficiency	High	High	High
Backwash Recycle Rate	High	Low	Moderate
Operational Complexity	Moderate	Moderate	High
Energy Consumption	Moderate	Moderate	High
Footprint Requirement	Small	Medium	Large
Process Kinetics (Reaction Time)	2.5 Min	5 Min	20 Min
Chemical Addition Requirements	Yes, Chlorine	Yes, KMnO4	No Chemicals
Ability to handle change in source water quality	High	High	Moderate
Equipment Maintenance	Moderate	Moderate	High
Additional Equipment & Unit Processes	Moderate	Moderate	High

Table 7.7 : RO with CCMF System Capital and Annual O&M Costs

Capital Cost

Inline Booster Pumps Installed	$72,000
Chlorination System Installed	$57,000
Rapid Mixer System Installed	$72,000
Catalytic Media Filtration System Installed	$751,000
Backwash Holding Tanks Installed	$101,000
Plate Settler Installed	$48,000
Sludge Pump Station Installed	$42,000
Decant Pump Station Installed	$54,000
Dechlorination System Installed	$26,400
Antiscalant System Installed	$28,800
RO System Installed	$1,512,000
CIP System Installed	$50,000
Sodium Hydroxide System Installed	$30,000
Brine Equalization Tank Installed	$74,900
Equipment Subtotal	$2,919,100
Piping, I&C, and Electrical Allowance (40%)	$1,167,600
Canopy Structure (Building) Cost	$242,300
Sub Total 1	$4,329,000
Contingency (20%)	$865,800
Sub Total 2	$5,194,800
Taxes, Insurance, & Bonding (8.5%)	$441,600
Sub Total 3	$5,636,400
Design & CM Fee (15%)	$845,500
Capital Cost	**$6,482,000**

Annual O&M Cost (at 26% Well Utilization Rate)

Annual Power Cost, $/yr	$29,900
Chlorine Cost, $/yr	$27,400
Sodium Bisulfite Cost, $/yr	$12,800
Antiscalant Cost, $/yr	$12,800
CIP Chemicals Cost, $/yr	$5,000
Sodium Hydroxide Cost, $/yr	$71,800
Sludge Disposal Cost, $/yr	$32,300
Brine Disposal Cost (Disposal to Sewer), $/yr	$68,300
Membrane Replacement Cost, $/yr	$34,700
Total Estimated Labor Cost, $/yr	$135,200
Equipment Maintenance Cost, $/yr	$29,200
Annual O&M Cost, $/yr	**$459,000**

20-year Present Worth Cost	**$12,201,000**

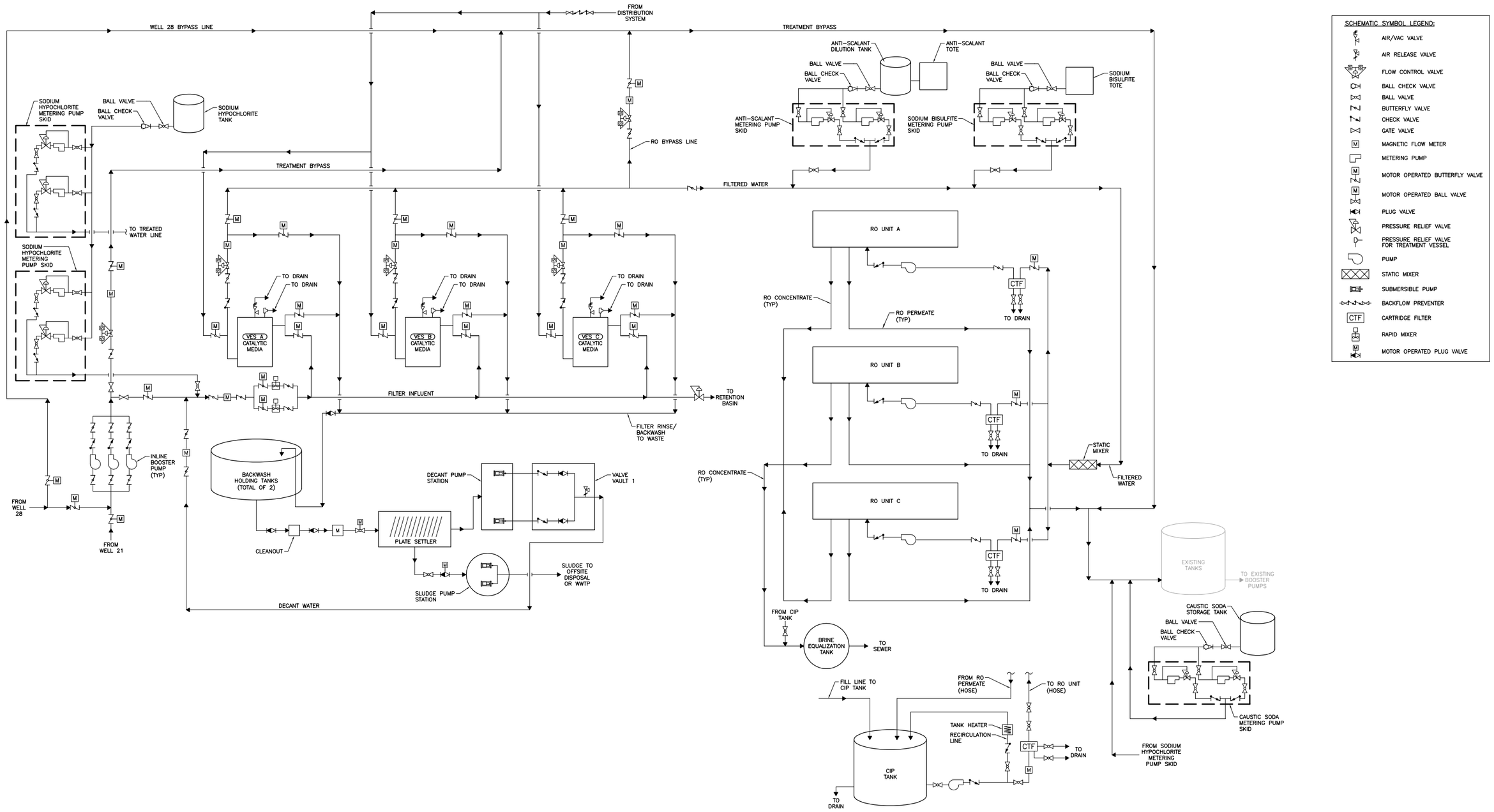

Z:\0445 – City of Avondale – Wellhead Treatment Study\CAD\Draft Final Report\FIGURE 7.4 – DBS TREATMENT PROCESS SCHEMATIC.dwg Aug 28, 2013 – 4:37pm

FIGURE 7.4
DBS TREATMENT PROCESS SCHEMATIC
CITY OF AVONDALE WELLHEAD TREATMENT STUDY

NCS Engineers

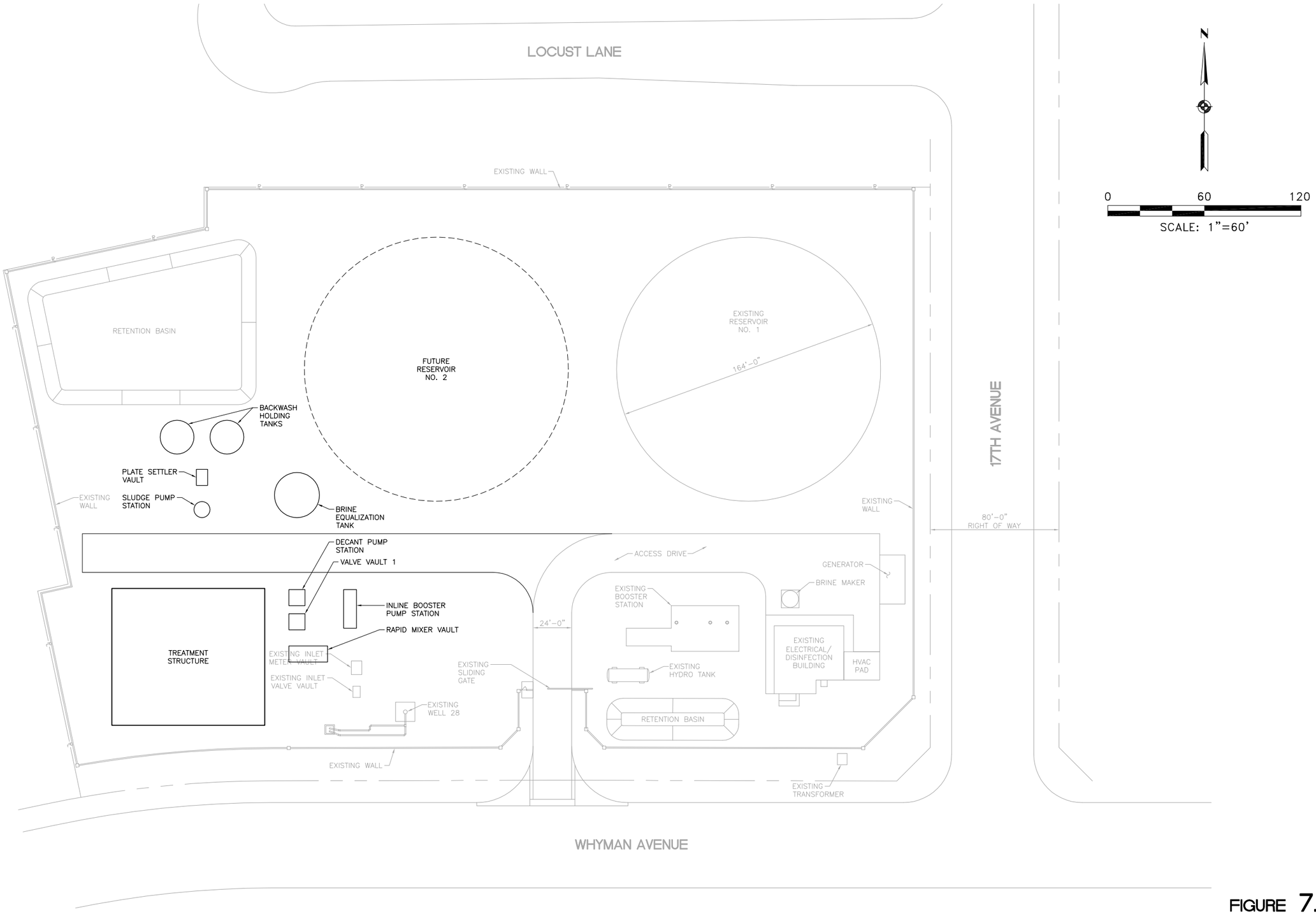

FIGURE 7.5
DBS CONCEPTUAL SITE PLAN
CITY OF AVONDALE WELLHEAD TREATMENT STUDY

NCS Engineers

Z:\0445 – City of Avondale – Wellhead Treatment Study\CAD\Draft Final Report\FIGURE 7.5 – DBS NEW FACILITIES SITE PLAN.dwg Aug 28, 2013 – 4:37pm

- Two backwash holding tanks, each 21 feet diameter x 16 feet high.
- One plate settler system to process backwash water.
- One sludge pump station.
- One decant pump station.
- One dechlorination system.
- One antiscalant system.
- Three RO skids (all three in operation).
- One clean in place (CIP) system.
- One caustic soda system.
- One brine equalization tank.
- Approximate 95 feet x 85 feet treatment building consisting of block walls and a canopy roof.

The proposed RO facility would generate brine at a flow rate of 250 gpm. As a short to mid term solution for brine disposal, it is proposed to dispose of brine into the regional sewer system. The capital cost of brine disposal to the regional sewer is estimated at $178,100. The annual O&M cost of brine disposal is estimated at $0.28/1,000 gallon of total water produced. As a potential long term solution for brine disposal, it is proposed to develop a land application site with salt tolerant plants and dispose of brine onto the land application site (no surface water discharge). The amount of brine generated at 26% utilization rate would be approximately 34 MG. The land area required for the disposal of 34 MG of brine per year is estimated at 35 acres. Assuming cost of land as $250,000 per acre, the cost of land for wetland development would be $8.8 million. Pilot testing should be performed before finalizing the land application disposal option.

7.5 SUMMARY AND CONCLUSIONS

Based on the above discussion, the following conclusions were made:

- RO with CCMF system is the most economical option for treating iron, nitrate, and TDS at Del Rio Booster Station. The capital cost for the proposed treatment facility is estimated at $6.5 million. The annual O&M cost for the proposed treatment facility is estimated at $459,000.
- The City shall perform pilot testing for both RO and EDR at the DBS to confirm the design parameters, water recovery, and brine characteristics. The approximate cost for pilot testing RO and EDR for TDS removal, and pilot testing a land application for brine disposal is $500,000.
- The total capital cost associated with the DBS treatment facilities is $7 million ($6.5 million for treatment + $500,000 for pilot testing). The DBS treatment system would produce water at a flow rate of 1,900 gpm. Therefore, the capital and annual O&M costs would correspond to $2.55/gpd water capacity and $1.77/1,000 gallons total water produced (at 26% utilization rate), respectively.
- As a short to mid term solution for brine disposal, it is proposed that brine generated from RO facility be discharged to the regional wastewater system. As a potential long term solution for brine disposal, it is proposed to develop a land application site with salt tolerant plants and dispose of brine onto the land application site (no surface water discharge). The land area required for the disposal of 34 MG of brine per year is estimated at 35 acres.
- Iron sludge generated from the iron removal facility would be discharged to an offsite waste handling facility.

- Once the water treatment facility is constructed and operational, it would improve the water system reliability by providing additional water. It would also improve DBS site reliability as either one or both the wells can be utilized as needed.

7.6 RECOMMENDATIONS

Based on the above discussion, NCS recommends the following:

- The City perform pilot testing for both RO and EDR at the DBS to confirm the design parameters, water recovery, and brine characteristics.
- The City perform a comprehensive study for identifying long term brine disposal strategies.
- The City perform pilot testing for brine disposal to a land application site.
- The RO and EDR pilot testing would take approximately three months. The land application pilot testing would take approximately one year.

CITY OF AVONDALE
WELLHEAD TREATMENT STUDY

FINAL REPORT

CHAPTER 8 - GARDEN LAKES WATER PRODUCTION FACILITY ASSESSMENT

TABLE OF CONTENTS

8.0 INTRODUCTION 8-1

8.1 PROCESS OPTIMIZATION 8-1
- 8.1.1 Breakthrough Curve 8-2
- 8.1.2 Hazardous Waste Considerations 8-3
- 8.1.3 Waste Rinse Quantities 8-5
- 8.1.4 Additional Process Optimization 8-6

8.2 SUMMARY AND CONCLUSIONS 8-6

8.3 RECOMMENDATIONS 8-6

LIST OF FIGURES

Figure 8.1 Nitrate Breakthrough Curve . . . . . After 8-2

Figure 8.2 Sulfate Breakthrough Curve . . . . . After 8-2

LIST OF TABLES

Table 8.1 Breakthrough Curve for the North Bank Vessel . . . . . After 8-2

Table 8.2 Breakthrough Curve for the South Bank Vessel . . . . . After 8-2

Table 8.3 North Bank Vessel - Regeneration/Rinse Streams Characterization . . . . After 8-3

Table 8.4 South Bank Vessel - Regeneration/Rinse Streams Characterization . . . . After 8-3

Table 8.5 Reduced IX Run Length Cost Analysis . . . . . After 8-4

Table 8.6 Bench Scale Test Results . . . . . After 8-4

CITY OF AVONDALE
WELLHEAD TREATMENT STUDY

FINAL REPORT

CHAPTER 8 - GARDEN LAKES WATER PRODUCTION FACILITY ASSESSMENT

8.0 INTRODUCTION

The Garden Lakes Water Production Facility (GLWPF) receives water from Well 17. At present, this site includes Well 17, a nitrate treatment facility (NTF), a 2 MG water storage reservoir, booster pumps, chlorine feed system, and hydropneumatic tank. The site also has provision for a future 2 MG water storage reservoir. Well 17 is an SRP paired well and produces 1,200 gpm. The City is allowed to pump up to 2,461 acre-feet/year from the well which is significantly higher than the average historical utilization rate of 21%. The existing NTF is owned and operated by the City.

The Spring 2013 water quality data shows the Well 17 has a nitrate level of 12 mg/L and requires treatment. The total chromium and chromium-VI (Cr-VI) levels in the well water are 15 and 13 parts per billion (ppb), respectively. The primary MCL for total chromium is 100 ppb which means the well water chromium level is below the primary MCL. Refer to Chapters 2 and 4 for discussion on Cr-VI and potential future regulations. For this study, it was assumed the future primary MCL for Cr-VI would be 10 ppb. Under that scenario, Well 17 would also require Cr-VI treatment. However, it is important to note that the existing NTF uses strong base anion (SBA) exchange resin for nitrate removal which is also capable of removing total chromium and Cr-VI from water. Therefore, a separate treatment facility for Cr-VI removal is not anticipated.

At present, the existing NTF is experiencing several regulatory and operational issues including a hazardous waste disposal concern with spent brine, potential nitrate MCL violation, and excess waste stream production. This chapter focuses on process optimization strategies to deal with these issues.

8.1 PROCESS OPTIMIZATION

The existing NTF system has 18 ion exchange (IX) vessels, a set of 9 vessels on the north side and another set of 9 vessels on the south side. Each IX vessel is 3 feet in diameter and contains approximately 185 gallons of IX resin. At any given time, 15 IX vessels are in service (treating water), the remaining three vessels are in either regeneration, rinse, or standby mode. The entire well flow of 1,200 is passed through the 15 vessels. Each vessel treats well water at a flow rate of 80 gpm and a loading rate of 11.3 gpm/ft^2. The empty bed contact time (EBCT) is approximately 2.3 minutes. The current set point for the vessel run length is 700 bed volumes (BVs) which corresponds to 26.8 hours of operation. The existing NTF also includes two waste tanks each with a capacity of 8,300 gallons and a salt tank with a capacity of 6,500 gallons (25 tons of bulk salt). At present, the entire amount of waste generated during regeneration/rinse cycle is stored in the onsite waste storage tanks and periodically disposed of to a solid waste landfill.

The system uses a standard SBA resin (sulfate selective resin) in the NTF. The selectivity sequence for this resin is sulfate> arsenate> nitrate> chloride> bicarbonate.

8.1.1 Breakthrough Curve

For the performance evaluation of the existing NTF, field testing was conducted and breakthrough curves were developed for the north and south bank vessels (one vessel from each bank). A breakthrough curve shows how long it takes before a particular vessel reaches its nitrate treatment goal. A detailed protocol was developed and provided to the City prior to performing the tests (attached as Appendix B to this report).

Tables 8.1 and 8.2 show the breakthrough test results collected so far for the north and south bank vessels. The breakthrough testing for the north and south bank vessels was started on February 28, 2013. Due to limited onsite waste storage capacity, only 8 hours of testing was performed on February 28, 2013. The waste generated from the testing was hauled to the solid waste landfill. However, due to a previous hazardous waste occurrence, the waste was quarantined by the landfill operator. It took approximately 4 weeks before acceptance of waste by the landfill.

During the February 28, 2013 testing, three samples (15 minute, fourth hour, and eighth hour) were collected for the north bank vessel. However all three samples had treated water nitrate levels equal to the well water nitrate level. Therefore, it was decided to switch to a different north bank vessel and restart the testing. The next rounds of testing were conducted on April 3 and 15, 2013 for the south bank vessel and on April 4, 2013 for the north bank vessel.

Figures 8.1 and 8.2 show the nitrate and sulfate breakthrough curves, respectively. Figure 8.1 shows a treated water nitrate level of 12.3 mg/L for the 15 minute sample for the south bank vessel (which is equal to the well water nitrate level). This is commonly seen in the IX system as it takes approximately 15 minutes after the regeneration cycle for bed ripening. Once the bed is ripened, it starts removing contaminants from the incoming water. Figure 8.1 also shows a rapid increase in treated water nitrate level from 6.2 mg/L at the 12th hour to 11.8 mg/L at the 16th hour for the south bank vessel. There is only one data point for the north bank vessel (i.e. 2.25 mg/L of nitrate at 15 minute). If the treated water nitrate goal is assumed at 8 mg/L, Figure 8.1 shows the south bank vessel reaches the nitrate treatment goal at approximately 13.5 hours. These results show the existing run length of 700 BVs (26.8 hours) is too long and likely doesn't meet the treated water nitrate goal of 8 mg/L. Therefore, it is recommended to reduce the vessel run length to 340 BVs (13 hours). This reduced run length should be field tested and adjusted to meet the treated water nitrate goal. If the run length is reduced, other set points need to be adjusted such that no more than three vessels are out of service at any given time.

Figure 8.2 shows an increase in treated water sulfate level from 82.6 mg/L at the eighth hour to well water sulfate level (94.5 mg/L) at approximately the 10th hour for the south bank vessel. There is only one data point for the north bank vessel (i.e. < 5 mg/L of sulfate at 15 minute). The south bank vessel data shows the sulfate breakthrough has occurred before the nitrate breakthrough. Based on IX kinetics and selectivity sequence, the nitrate breakthrough occurs soon after the sulfate breakthrough. Once the run length is reduced as recommended above, the sulfate breakthrough curves should be developed again and its impact on nitrate breakthrough reviewed.

Tables 8.1 and 8.2 also show total chromium test results. It shows there is a significant removal of total chromium by the SBA resin. At the 16th hour for the south bank vessel, the well water total chromium level was 15 ppb, however, the treated water total chromium level was < 5 ppb.

Table 8.1 : Breakthrough Curve for the North Bank Vessel

Date & Time	Hour	Well Water			Treated Water			
		Nitrate	Sulfate	Total Chromium	Nitrate	Sulfate	Total Chromium	Chromium-VI
		mg/L	mg/L	ppb	mg/L	mg/L	ppb	ppb
2/28/2013	15 Min	11.2	-	-	11.2*	109	< 5	-
2/28/2013	4 hr	-	-	-	11.4*	93.4	-	-
2/28/2013	8 hr	-	-	-	11.8*	93.6	< 5	-
4/4/2013	15 Min	11.8	-	-	2.25	< 5	< 5	-
	4 hr	-	-	-	X	X	-	-
	8 hr	-	-	-	X	X	X	X
	12 hr	-	-	-	X	X	-	
	16 hr	X	X	X	X	X	X	X
	18 hr	-	-	-	X	X	-	
	20 hr	-	-	-	X	X	X	X
	22 hr	-	-	-	X	X	-	
	24 hr	-	-	-	X	X	X	X
	26 hr	-	-	-	X	X	-	

X indicates testing needs to be conducted.

* These results were close to well water nitrate level, therefore it was decided to switch to a different north bank vessel.

Table 8.2 : Breakthrough Curve for the South Bank Vessel

Date & Time	Hour	Well Water			Treated Water			
		Nitrate	Sulfate	Total Chromium	Nitrate	Sulfate	Total Chromium	Chromium-VI
		mg/L	mg/L	ppb	mg/L	mg/L	ppb	ppb
2/28/2013	15 Min	12.3	-	-	12.3	< 5	< 5	-
2/28/2013	4 hr	-	-	-	2.87	28.1	-	-
2/28/2013	8 hr	-	-	-	3.21	82.6	< 5	-
4/3/2013	12 hr	-	-	-	6.2	100	-	-
4/15/2013	16 hr	12.7	94.5	15	11.8	95.6	< 5	X
	18 hr	-	-	-	X	X	-	-
	20 hr	-	-	-	X	X	X	X
	22 hr	-	-	-	X	X	-	-
	24 hr	-	-	-	X	X	X	X
	26 hr	-	-	-	X	X	-	-

X indicates testing needs to be conducted.

Figure 8.1 : Nitrate Breakthrough Curve

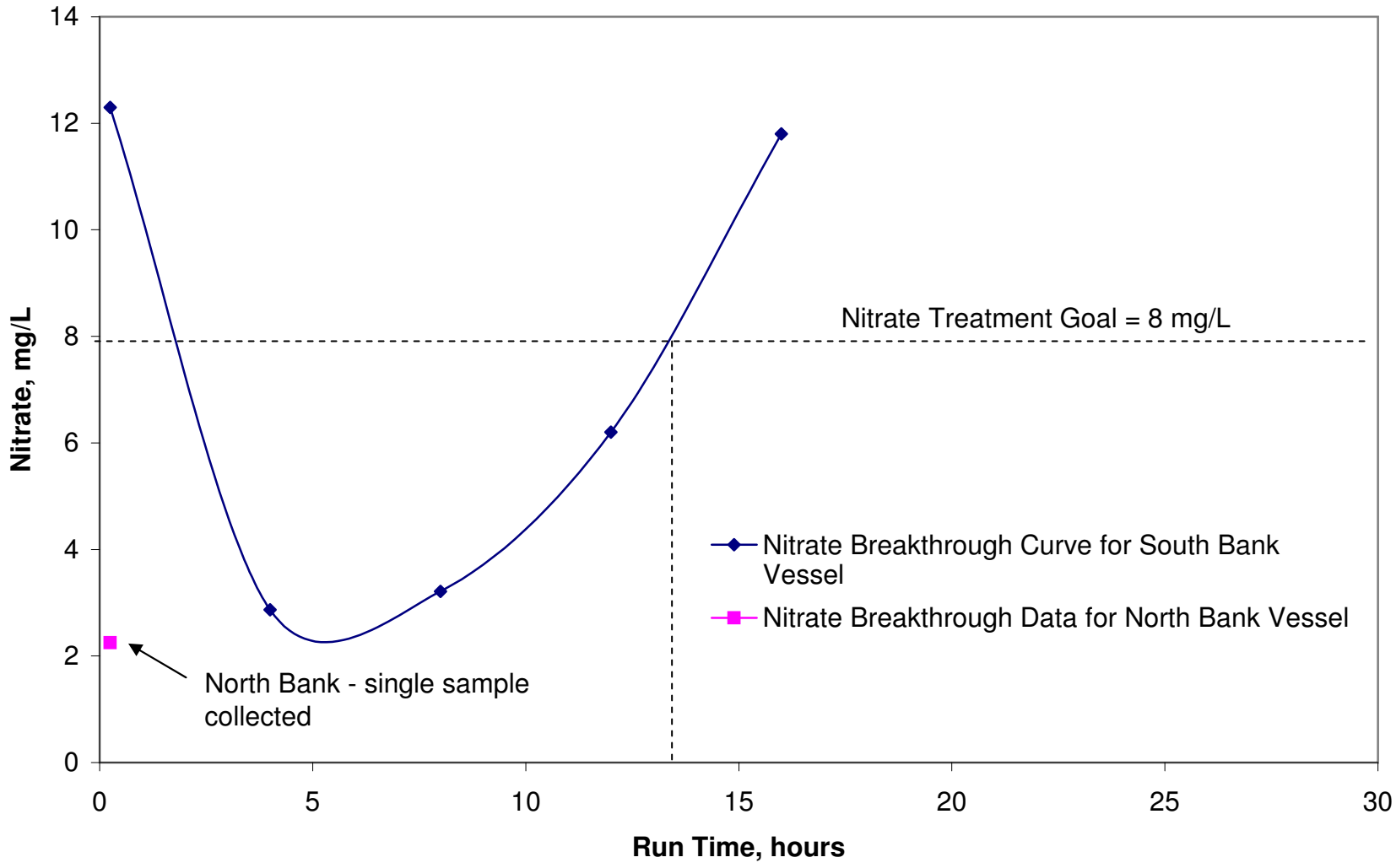

Figure 8.2 Sulfate Breakthrough Curve

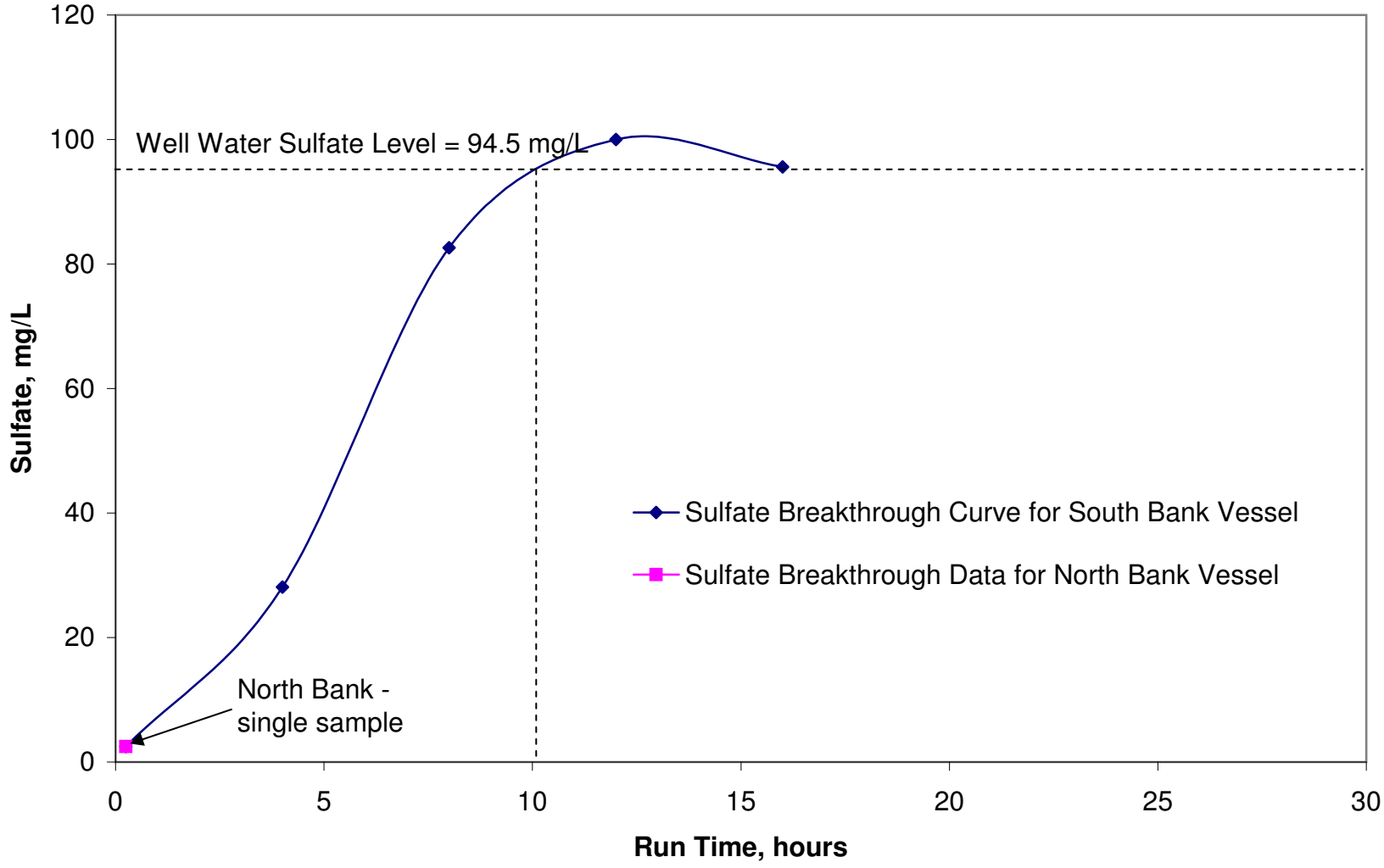

8.1.2 Hazardous Waste Considerations

During the regeneration process, most of the nitrates and total chromium absorbed by the IX resin are replaced by chloride ions by law of mass action and ion selectivity. Therefore, spent brine becomes heavily loaded with nitrate and total chromium. If the total chromium level in the spent brine goes above a threshold level it turns the waste into the hazardous category. According to the Resource Conservation Recovery Act (RCRA), if the toxicity characteristic leaching procedure (TCLP) test result for total chromium is above 5 mg/L, the waste is categorized as hazardous waste. Arsenic also represents a hazardous waste concern in the spent brine with a 5 mg/L standard.

To determine characteristics of the waste, the regeneration/rinse streams were tested. A detailed protocol was developed and provided to the City prior to performing the test. The lab results for the regeneration/rinse streams are presented in Tables 8.3 and 8.4. During field testing, it was noticed that the NTF Program Logic Controller (PLC) skips Step 4, therefore no samples could be collected for this step. The regeneration/rinse streams were analyzed for total chromium, arsenic, and TDS. The regeneration/rinse streams can be mainly categorized into two streams, spent brine (S1-RGN1 and S2-RGN1) and rinse effluent (S6-RNS1, S7-RNS1, and S8-RNS1). At present, both streams discharge into the waste tanks and are periodically disposed to a solid waste landfill as a non-hazardous waste. Tables 8.3 and 8.4 show the spent brine is mainly responsible for the high total chromium in the combined waste (spent brine + rinse effluent). Four options were evaluated to handle the high total chromium levels in the waste stream:

1. Segregation of spent brine stream and disposal as a hazardous waste.
2. Reduced IX run length (i.e. reduced number of BVs during treatment cycle).
3. Segregation of spent brine stream and treatment.
4. Change of resin type.

Option 1 - Segregation of spent brine stream and disposal as a hazardous waste - Under this option, the City would segregate spent brine and rinse effluent. The spent brine would be hauled and disposed of as a hazardous waste. The rinse effluent would be hauled and disposed of as a non hazardous waste or discharged to the sewer. It would cost the City approximately $2/gallon for the disposal of hazardous spent brine. There is no hazardous waste disposal site within Arizona (the hazardous waste would have to be sent out of state). At present, each vessel goes through a regeneration/rinse cycle after 700 BVs (26.8 hours). This means each vessel goes through a regeneration/rinse cycle 0.9 times a day. Based on the current set points, the amount of spent brine (not including rinse effluent) generated each day would be approximately 2,220 gallons. If the entire amount of spent brine is disposed of as hazardous waste, it would cost approximately $4,440 per day. This daily cost corresponds to $340,000 per annum at a 21% well utilization rate just for the spent brine disposal. This option appears to be very expensive and is not considered as a viable alternative.

Option 2 - Reduced IX run length - Tables 8.1 and 8.2 show the SBA resin removes a significant amount of total chromium from the well water. SBA resin removes approximately 70% of the total chromium from well water, accordingly, the spent brine total chromium concentration was estimated to be approximately 14.6 mg/L at a 26.8 hour run length and 1 BV of regenerant (salt solution). This shows the run length has to be reduced by two thirds (i.e. to 9 hours) to limit the total chromium concentration below 5 mg/L at 1 BV of regenerant. This option appears to be viable as it would only require set point changes in the control logic.

Table 8.3 : North Bank Vessel - Regeneration/Rinse Streams Characterization

Date	Steps	Bed Volumes (BVs)	Tag ID	Sample Location	Direction of Flow	Total Chromium, mg/L	Arsenic, mg/L*	TDS, mg/L
2/28/2013	Step 1: Salt Addition - Recover to Salt Tank	0.15 BVs	S1-RGN2	Regen 2 Vessel Effluent	Regen 2 Eff to Regen 1 Ves	8.44	< 20	-
			S1-RGN1	Regen 1 Vessel Effluent	Regen 1 Eff to Salt Tank	0.227	< 2	220,000
2/28/2013	Step 2: Salt Addition - To Waste	0.80 BVs	S2-RGN2	Regen 2 Vessel Effluent	Regen 2 Eff to Regen 1 Ves	2.11	< 20	-
			S2-RGN1	Regen 1 Vessel Effluent	Regen 1 Eff to Waste	4.64	< 20	226,500
2/28/2013	Step 3: Salt Addition - Contact Time	8 Min	No sampling required.					
2/28/2013	Step 4: Water Addition	This step was not performed by the NTF PLC.	No sampling was performed as PLC skipped this step.					
2/28/2013	Step 5: Water Addition Contact Time	This step was not performed by the NTF PLC.	No sampling required.					
2/28/2013	Step 6: Flow to Waste	0.30 BVs	S6-RNS1	Rinse 1 Effluent	Rinse 1 Eff to Waste	0.51	< 20	275,000
2/28/2013	Step 7: Recover to Salt Tank	Fill the salt tank to marked level.	S7-RNS1	Rinse 1 Effluent	Rinse 1 Eff to Salt Tank	< 0.50	< 20	253,000
2/28/2013	Step 8: Flow to Waste	4.8 BVs	S8-RNS1	Rinse 1 Effluent	Rinse 1 Eff to Waste	< 0.10	< 4	17,400
2/28/2013	Composite Waste Sample	-		Waste Tank	Waste Tank	0.716	< 4	-

* Due to high TDS interference, the lab was unable to report accurate arsenic level.

Salt Concentration used for Regeneration

Date	Sample Type	Sodium, mg/L	Chloride, mg/L	Salt Concentration, %
2/28/2013	Brine Sample	44,100	380,000	11

Table 8.4 : South Bank Vessel - Regeneration/Rinse Streams Characterization

Date	Steps	Bed Volumes (BVs)	Tag ID	Sample Location	Direction of Flow	Total Chromium, mg/L	Arsenic, mg/L*	TDS, mg/L
2/28/2013	Step 1: Salt Addition - Recover to Salt Tank	0.15 BVs	S1-RGN2	Regen 2 Vessel Effluent	Regen 2 Eff to Regen 1 Ves	2.78	< 20	-
			S1-RGN1	Regen 1 Vessel Effluent	Regen 1 Eff to Salt Tank	0.018	< 0.20	3,020
2/28/2013	Step 2: Salt Addition - To Waste	0.80 BVs	S2-RGN2	Regen 2 Vessel Effluent	Regen 2 Eff to Regen 1 Ves	0.59	< 20	-
			S2-RGN1	Regen 1 Vessel Effluent	Regen 1 Eff to Waste	1.69	< 20	30790
2/28/2013	Step 3: Salt Addition - Contact Time	8 Min	No sampling required.					
2/28/2013	Step 4: Water Addition	This step was not performed by the NTF PLC.	No sampling was performed as PLC skipped this step.					
2/28/2013	Step 5: Water Addition Contact Time	This step was not performed by the NTF PLC.	No sampling required.					
2/28/2013	Step 6: Flow to Waste	0.30 BVs	S6-RNS1	Rinse 1 Effluent	Rinse 1 Eff to Waste	< 0.50	< 20	257,000
2/28/2013	Step 7: Recover to Salt Tank	Fill the salt tank to marked level.	S7-RNS1	Rinse 1 Effluent	Rinse 1 Eff to Salt Tank	< 0.50	< 20	233,000
2/28/2013	Step 8: Flow to Waste	4.8 BVs	S8-RNS1	Rinse 1 Effluent	Rinse 1 Eff to Waste	< 0.025	< 1	10,200
2/28/2013	Composite Waste Sample	-		Waste Tank	Waste Tank	1.07	< 20	-

* Due to high TDS interference, the lab was unable to report accurate arsenic level.

Salt Concentration used for Regeneration

Date	Sample Type	Sodium, mg/L	Chloride, mg/L	Salt Concentration, %
2/28/2013	Brine Sample	50,300	590,000	13

Table 8.5 presents cost analysis for two scenarios, Scenario 1 with a 9 hour run length and Scenario 2 with a 13 hour run length. Under Scenario 1, the total amount of spent brine generated each day would be 3,000 gallons. Based on a dilution factor of 1.4, the combined waste generated would be 4,200 gallons per day (gpd). Rinse effluent would be used for the dilution of spent brine. The excess rinse effluent, approximately 24,000 gpd, would be disposed of to the sewer. The amount of salt required for regeneration would be 1.5 tons/day. Based on a 21% well utilization rate, the annual cost for spent brine disposal and salt would be $121,000.

Under Scenario 2, the total amount of spent brine generated each day would be 2,000 gallons. Based on a dilution factor of 2, the combined waste generated would be 4,000 gpd. Rinse effluent would be used for the dilution of spent brine. The excess rinse effluent, approximately 15,400 gpd, would be disposed of to the sewer. The amount of salt required for regeneration would be 1.0 tons/day. Based on a 21% well utilization rate, the annual cost for spent brine disposal and salt would be $113,000.

Option 3 - Segregation of spent brine stream and treatment - Under this option, the spent brine and rinse effluent would be segregated. The spent brine would be treated using a coagulation-sedimentation technique to reduce total chromium concentration. After treatment, the treated spent brine would be recycled back to the waste tank and mixed with rinse effluent. The combined waste would be disposed of to a solid waste landfill as a non-hazardous waste.

To evaluate this option, two different coagulants, calcium polysulfide (CPS) and ferric chloride ($FeCl_3$), were tested at a bench scale level. A bench scale testing protocol was developed and provided to the City prior to testing. For the bench scale testing, the spent brine sample (not combined with rinse effluent) was collected on April 15, 2013. The bench testing was performed at NCS Engineers' office using a Phipps & Bird jar testing equipment. Two liters of spent brine was transferred into each jar followed by addition of coagulant and acid (to adjust pH). The jar testing conditions typically included rapid mixing for 60 seconds at 200 rpm, reaction time of 20 minutes at 50 rpm, and settling time of 30 minutes. After settling, the laboratory samples were collected for total chromium.

Table 8.6 presents the bench scale testing results. CPS was tested at varying doses and pH conditions. Jars 1, 2, and 3 were tested at 40, 70, and 100 mg/L of CPS, respectively, at a flocculation pH of 6.2. Jars 4 and 5 were tested at 70 and 100 mg/L of CPS, respectively, at an ambient pH of 8.1. The spent brine total chromium level was 9.4 mg/L. The test results show the percentage removal increased from 20 to 25% with an increase in CPS dose from 40 to 100 mg/L at pH of 6.2. The percentage removal for Jar 4 (70 mg/L of CPS and ambient pH) and Jar 5 (100 mg/L of CPS and ambient pH) were 25% and 17%, respectively. The above results show lowering pH did not improve removal efficiency. Also, the increased CPS dose only improved removal efficiency marginally.

Ferric chloride was also tested at varying doses and pH conditions. Jars 1, 2, and 3 were tested at 40, 70, and 100 mg/L of $FeCl_3$, respectively, at a flocculation pH of 6.2. Jars 4 and 5 were tested at 70 and 100 mg/L of $FeCl_3$, respectively, at an ambient pH of 8. The spent brine total chromium level was 9.4 mg/L. The test results show the percentage removal was not appreciable using FeCl3 and varied from 0 to 16%. CPS performed considerably better than $FeCl_3$.

Table 8.5 : Reduced IX Run Length Cost Analysis

Number of Vessels in Service	15
One Bed Volume, gallons	185
Amount of Spent Brine Generated during each Regeneration Cycle per Vessel, BVs	0.8
Amount of Spent Brine Generated during each Regeneration Cycle per Vessel, gallons	148
As Brine is used twice, the Amount of Spent Brine Generated during Each Regeneration Cycle per Vessel, gallons	74
Amount of Rinse Effluent Generated during each Rinse Cycle, BVs	5.1
Amount of Rinse Effluent to Waste Tank during each Rinse Cycle, BVs	3.4
Amount of Rinse Effluent to Waste Tank during each Rinse Cycle, gallons	629
Salt Concentration (to be used for regeneration), %	10
Amount of 10% Brine Required for Each Vessel during Regeneration Cycle, BVs	0.95
Volume of 10% Brine Required for Each Regeneration Cycle, gallons	176
Mass of 10% Brine Required for Each Regeneration Cycle, lbs	1,466
Assuming Percentage Salt Concentration (to be supplied), %	100
Mass of 100% Salt Required for Each Regeneration Cycle, lbs	147
Brine Reuse Frequency	2
Mass of 100% Salt Required for Each Regeneration Cycle, lbs	73

	Scenario 1	**Scenario 2**
Run Length, hours	**9**	**13**
Number of Vessels in Service	15	15
# of Regeneration/Rinse Cycle Each Day Each Vessel	2.7	1.8
Amount of Spent Brine Generated Each Day, gallons	3,000	2,000
Expected Total Chromium Concentration, mg/L	4.9	7.1
Dilution Factor	1.4	2.0
Amount of Combined Waste to be Disposed of Offsite, gpd	4,200	4,000
Amount of Rinse Effluent to be Disposed of into Sewer, gpd	24,000	15,400
Amount of 100% Salt Required Each Day, lbs	2,900	2,000
Amount of 100% Salt Required Each Day, tons	1.5	1.0
At 21% Well Utilization Rate	21	21
Unit Cost of Spent Brine Disposal, $/gallon	$0.35	$0.35
Annual Cost of Spent Brine Disposal, $/yr	$112,700	$107,300
Unit Cost of Salt, $/ton	$75	$75
Annual Cost of Salt, $/yr	$8,300	$5,700
	$121,000	**$113,000**

Table 8.6 : Bench Scale Test Results

Coagulation using Calcium Polysulfide (CPS)

	CPS Dose	pH after CPS Addition	pH After Acid Addition	Total Chromium	Total Chromium Removal
	mg/L	Standard Unit	Standard Unit	mg/L	%
Spent Brine	-	8.3	-	9.4	-
Jar 1	40	8.0	6.2	7.5	20%
Jar 2	70	8.1	6.2	9.7**	-
Jar 3	100	8.1	6.2	7.1	25%
Jar 4	70	8.1	*	7.0	25%
Jar 5	100	8.1	*	7.8	17%

* No acid addition.

** This result does not appear to be correct. It could be due to either mislabeling or contamination during testing.

Coagulation using Ferric Chloride ($FeCl_3$)

	$FeCl_3$ Dose, mg/L	pH after $FeCl_3$ Addition	pH After Acid Addition	Total Chromium	Total Chromium Removal
	mg/L	Standard Unit	Standard Unit	mg/L	%
Spent Brine	-	8.3	-	9.4	-
Jar 1	40	8.1	6.2	7.9	16%
Jar 2	70	8.0	6.2	8.8	6%
Jar 3	100	7.9	6.2	8.5	9%
Jar 4	70	8.0	*	9.4	0%
Jar 5	100	7.9	*	9.3	1%

* No acid addition.

If this option is pursued, CPS at a dose of 70 mg/L without pH adjustment should be used. The total chromium removal is expected to be approximately 25%. This option might not reduce the total chromium concentration below the RCRA TCLP threshold limit, therefore, the treated spent brine should be mixed with rinse effluent for further dilution of total chromium. After mixing, the total chromium concentration in the combined waste is expected to be less than 5 mg/L. As the required coagulant dose is high, it would generate a significant amount of sludge which requires disposal (TCLP analysis would be required to determine waste category).

Based on above analysis, this option does not appear to be viable as it requires high doses of coagulants, and the percentage removal is not significant.

Option 4 - Change of resin type - At present, the NTF is using a non-selective SBA resin for nitrate removal. This resin is sulfate selective. It removes nitrate, sulfate, total chromium, bicarbonate, and other anions from the well water. The selectivity sequence for this resin is sulfate> arsenate> nitrate> chloride> bicarbonate. One of the options to eliminate the hazardous waste issue is to replace the standard SBA resin with a nitrate selective resin. Based on resin manufacturer's data sheets (from DOW and Purolite), the nitrate selective resin has a preference of selecting nitrate over sulfate, but no preference for selecting nitrate over chromate (ionized form of total chromium). Therefore, even if nitrate selective resin would be used, it would still remove a significant amount of total chromium and discharge it into the brine during regeneration.

Based on the above evaluation, the following conclusions were made:

- Option 1 - "Segregation of spent brine stream and disposal as hazardous waste" would be very expensive as it would cost approximately $340,000 per annum just for the spent brine disposal
- Option 3 - "Segregation of spent brine and treatment" was not effective for total chromium removal and coagulant doses were very high
- Option 4 - "Change of resin type" would not be effective either as it would still remove significant amount of total chromium.
- Option 2 - "Reduced IX run length" appears to be the most viable. It is recommended to reduce the run length to between 9 to 13 hours (235 to 340 BVs).

The City should field test and adjust the reduced run length to meet both the treated water nitrate goal and total chromium level in the combined waste. If the run length is reduced, other set points need to be adjusted accordingly such that no more than three vessels are out of service at any given time. The rinse effluent should be used for further dilution of spent brine. The excess rinse effluent should be disposed of to the sewer.

8.1.3 Waste Rinse Quantities

Tables 8.3 and 8.4 show Step 8 - Flow to Waste (rinse step) requires an excessive amount of water (4.8 BVs which is equal to approximately 890 gallons of water per vessel). This water demand could be reduced to 2.5 BVs (463 gallons) without affecting regeneration/rinse efficiency. This would reduce the volume of waste generated, thus reduce cost for hauling and disposing of the waste. At present, each vessel goes through a regeneration/rinse cycle after 700 BVs (26.8 hours). This means each vessel goes through a regeneration/rinse cycle 0.9 times a day. If Step 8 bed volumes would be reduced to 2.5, it would reduce waste volume by 5,700 gallons per day.

8.1.4 Additional Process Optimization

Based on the above observations, additional optimization activities should be performed by the City:

- Implement optimization adjustments (set point changes for run time and regeneration steps, and change in regeneration procedure).
- Verify that implemented optimization adjustments are providing the desired results.
- Verify waste stream characteristics.
- Validate performance and develop new breakthrough curves.
- Implement waste segregation plan (offsite disposal of spent brine and sewer disposal of excess rinse effluent).

8.2 SUMMARY AND CONCLUSIONS

Based on the above discussion, the following conclusions are made:

- Based on the breakthrough curve, it was determined the current run length of 700 BVs (26.8 hours) is too long and may lead to elevated nitrate levels in the treated water. This run length should be reduced to 340 BVs (13 hours).
- To deal with the high total chromium issue in the combined waste, a reduced IX run length appears to be the most viable option. The run length should be reduced to 235 - 340 BVs (9 to 13 hours). The rinse effluent should be used for further dilution of spent brine. The excess rinse effluent should be disposed of to the sewer.
- The Step 8 bed volumes should be reduced to 2.5 BVs from 4.8 BVs, the present setting.

8.3 RECOMMENDATIONS

Based on the above discussion, NCS recommends the following:

- The City should implement, field test, and adjust the reduced IX run length to meet both the treated water nitrate goal of 8 mg/L and total chromium level of less than 5 mg/L in the combined waste stream. If the run length is reduced, other set points should be adjusted accordingly such that no more than three vessels are out of service at any given time.
- Perform Steps 4 and 5 of the regeneration/rinse cycle. It would improve the overall efficiency of the regeneration/rinse cycle.
- Clean/flush both waste tanks once every six months. This would remove any deposit from the bottom of the tanks which could be responsible for instantaneous high level of total chromium in the waste stream.
- Perform additional process optimization activities as listed in Paragraph 8.1.4 to ensure that spent brine is not hazardous and to ensure nitrate MCL compliance.
- The implementation of the above strategies would allow the existing NTF to run more reliably and would provide additional water to the system.

CITY OF AVONDALE
WELLHEAD TREATMENT STUDY

FINAL REPORT

CHAPTER 9 - GATEWAY WATER PRODUCTION FACILITY ASSESSMENT

TABLE OF CONTENTS

9.0 INTRODUCTION 9-1

9.1 PROCESS OPTIMIZATION 9-2
9.1.1 Additional Process Optimization 9-3

9.2 EXPANSION OF TREATMENT FACILITIES 9-3

9.3 SUMMARY AND CONCLUSIONS 9-6

9.4 RECOMMENDATIONS 9-6

CITY OF AVONDALE
WELLHEAD TREATMENT STUDY

FINAL REPORT

CHAPTER 9 - GATEWAY WATER PRODUCTION FACILITY ASSESSMENT

LIST OF FIGURES

Figure 9.1 Nitrate Breakthrough Curve . . . . . After 9-2

Figure 9.2 Sulfate Breakthrough Curve . . . . . After 9-2

Figure 9.3 Process Schematic for Expansion of Gateway Treatment Facilities . . . . After 9-5

Figure 9.4 Proposed Site Plan for Additional Gateway Treatment Facilities . . . . . After 9-5

LIST OF TABLES

Table 9.1 Breakthrough Curve for the North Bank Vessel . . . . . After 9-2

Table 9.2 Breakthrough Curve for the South Bank Vessel . . . . . After 9-2

Table 9.3 Reduced IX Run Length Cost Analysis . . . . . After 9-3

Table 9.4 North Bank Vessel - Regeneration/Rinse Streams Characterization . . . . After 9-3

Table 9.5 South Bank Vessel - Regeneration/Rinse Streams Characterization . . . . After 9-3

Table 9.6 1,000 gpm IX System Capital and Annual O&M Costs . . . . . After 9-4

Table 9.7 1,700 gpm IX System Capital and Annual O&M Costs . . . . . After 9-4

Table 9.8 3,000 gpm IX Systems Capital and Annual O&M Costs . . . . . After 9-4

Table 9.9 IX and GAC Systems Cost Scenarios . . . . . After 9-5

CITY OF AVONDALE
WELLHEAD TREATMENT STUDY

FINAL REPORT

CHAPTER 9 - GATEWAY WATER PRODUCTION FACILITY ASSESSMENT

9.0 INTRODUCTION

The Gateway Water Production Facility (GWPF) treats water from Wells 8A and 24. At present, this site has a nitrate treatment facility (NTF) for Well 8A, a dibromo-chloropropane (DBCP) treatment facility for Well 8A, a 1 million gallon (MG) water storage reservoir, booster pump station, chlorine feed system, and hydropneumatic tank. The Spring 2013 water quality shows that Well 8A has a nitrate level of 16 milligram per liter (mg/L) and a DBCP level of 1.1 parts per billion (ppb). The primary MCLs for nitrate and DBCP are 10 mg/L and 0.2 ppb, respectively. At this time, Well 24 does not have any water quality issues, and does not receive any treatment. Based on two lab results provided by the City, the average nitrate level for Well 24 is calculated at 8.15 mg/L. Wells 8A and 24 start based on the water level in the reservoir and can be operated independently. At present, Well 24 is in the lead position due to better water quality and starts first to fill the reservoir. However, if demand is high and Well 24 alone is unable to meet the demand, Well 8A is called to run. Well 8A treated water and Well 24 water are manifolded together before discharge into the reservoir. The City owns and operates the Well 8A NTF.

At present, Well 8A is equipped with a 3,000 gallons per minute (gpm) pump, however, due to the limited capacity of the NTF, the well only pumps at 2,000 gpm. When the well starts, for an initial few minutes it discharges to an adjacent canal at a flow rate of 3,000 gpm (as a well pump out). After the pump out, the flow is reduced to 2,000 gpm by throttling a valve downstream of the well pump. This causes significant back pressure on the well pump and requires more energy to operate the well pump. The existing IX NTF is designed to handle a well flow rate of 2,000 gpm. Of the 2,000 gpm well flow rate, 1,300 gpm is passed through the NTF, and the remaining 700 gpm is bypassed and blended with the NTF treated water. After the NTF treatment, the combined treated water (2,000 gpm) is passed through granular activated carbon (GAC) filters. The GAC filters are designed for DBCP treatment. There are two GAC filters, each capable of treating 1,000 gpm. These filters run in parallel.

As indicated above, Well 24 does not receive any treatment. This well produces at a flow rate of 750 gpm and has a DBCP level of < 0.02 ppb (which is below the primary MCL). In this study, it was assumed this well does not have any water quality issues except chromium-VI (Cr-VI) as discussed below.

During Spring 2013, both Wells 8A and 24 were sampled and analyzed for Cr-VI. The Spring 2013 results show Wells 8A and 24 Cr-VI levels are 2.6 and 28 ppb, respectively. Refer to Chapters 2 and 4 for details on Cr-VI. For this study, it was assumed the primary MCL for Cr-VI would be 10 ppb. If Well 8A produces at 3,000 gpm and Well 24 produces at 750 gpm, the blended water Cr-VI level is expected to be 7.7 ppb. Depending on Well 8A production rate, Well 24 may or may not require Cr-VI treatment in the future.

This chapter focuses on process optimization of the existing NTF system and expansion of treatment facilities (both NTF and GAC) to accommodate full flow from Well 8A.

9.1 PROCESS OPTIMIZATION

The existing NTF system has 18 ion exchange (IX) vessels, a set of 9 vessels on the north side and another set of 9 vessels on the south side. Each IX vessel is 3 feet in diameter and contains approximately 185 gallons of IX resin. At any given time, 15 IX vessels are in service (treating water), the remaining 3 vessels are in either regeneration, rinse, or standby mode. Of the 2,000 gpm well flow, 1,300 gpm is passed through 15 vessels, the remainder is bypassed and blended with NTF treated water. Each vessel treats well water at a flow rate and loading rate of 86.7 gpm and 12.3 gpm/ft^2, respectively. The empty bed contact time (EBCT) is approximately 2.1 minutes. The current set point for the vessel run length is 265 bed volumes (BVs) which is equal to 9 hours. The existing NTF also includes two waste tanks each with a capacity of 8,500 gallons and a salt tank with a capacity of 8,500 gallons (35 tons of bulk salt). At present, the entire amount of waste generated during regeneration/rinse cycle is stored in onsite waste tanks and periodically disposed of to a solid waste landfill.

The City is using a standard SBA exchange resin (a sulfate selective resin) in the NTF. The selectivity sequence for this resin is sulfate> arsenate> nitrate> chloride> bicarbonate.

For the performance evaluation of the existing NTF, breakthrough curves were developed for the north bank and south bank vessels (one vessel from each bank). The breakthrough curve shows how long it takes before a particular vessel reaches its nitrate treatment goal. The regeneration/rinse streams were also characterized to determine the appropriate disposal method. A detailed protocol was developed and provided to the City prior to performing the tests (attached as an Appendix C to this report).

Tables 9.1 and 9.2 show the breakthrough test results for the north bank and south bank vessels, respectively. Figures 9.1 and 9.2 show the nitrate and sulfate breakthrough curves, respectively. Figure 9.1 shows a rapid increase in the treated water nitrate level from 3.4 mg/L at the sixth hour to 10.8 mg/L at the seventh hour for the north bank vessel. Similarly, a rapid increase in the treated water nitrate level from 2.6 mg/L at the sixth hour to 6.1 mg/L at the seventh hour was observed for the south bank vessel. Assuming the combined treated water (NTF treated + bypassed) goal for nitrate as 8 mg/L, the NTF treated water nitrate level should be approximately 3.8 mg/L (blend from all the vessels). Since all the vessels do not reach breakthrough at the same time, the nitrate breakthrough point for individual vessels can be higher than 3.8 mg/L. Based on the data, the target nitrate breakthrough point for individual vessels is assumed as 6.5 mg/L. For this breakthrough point, the current set point for run length (265 BVs or 9 hours) is considerably long. The individual vessels are reaching breakthrough much earlier (between sixth and seventh hour for the north bank vessel, and between seventh and eighth hour for the south bank vessel). In order to meet the combined treated water nitrate goal of 8 mg/L, it is recommended to reduce the vessel run length to 183 BVs (6.5 hours). This reduced run length should be field tested and adjusted to meet the combined treated water nitrate goal. If the run length is reduced, several other set points may need to be adjusted such that no more than three vessels are out of service at any given time.

Table 9.1 : Breakthrough Curve for the North Bank Vessel

Date & Time	Hour	Well Water			Treated Water		
		Nitrate+Nitrite**	Sulfate	Arsenic*	Nitrate+Nitrite	Sulfate	Arsenic*
		mg/L	mg/L	ppb	mg/L	mg/L	ppb
4/19/2013	15 Min	16.5			2.2	< 5	< 20
4/19/2013	1 hr				2.0	< 5	
4/19/2013	2 hr				2.4	82	
4/19/2013	3 hr				2.3	88	
4/19/2013	4 hr	16.1	112	< 20	2.4	116	< 20
4/19/2013	5 hr				2.6	122	
4/19/2013	6 hr				3.4	123	
4/19/2013	7 hr				10.8	116	
4/19/2013	8 hr				8.2	119	< 20

* Due to high TDS interference, the lab was unable to utilize a detection limit lower than 20 ppb.
** The well water has very low levels of nitrite, therefore nitrate+nitrite levels are very close to nitrate levels. These analytes (nitrate and nitrite) were not analyzed separately to reduce lab cost.

Table 9.2 : Breakthrough Curve for the South Bank Vessel

Date & Time	Hour	Well Water			Treated Water		
		Nitrate+Nitrite**	Sulfate	Arsenic*	Nitrate+Nitrite	Sulfate	Arsenic*
		mg/L	mg/L	ppb	mg/L	mg/L	ppb
4/19/2013	15 Min	16.5			1.8	< 5	< 20*
4/19/2013	1 hr				1.6	< 5	
4/19/2013	2 hr				1.6	< 5	
4/19/2013	3 hr				1.8	86	
4/19/2013	4 hr	16.2	112	< 20	1.8	95	< 20
4/19/2013	5 hr				2.1	114	
4/19/2013	6 hr				2.6	120	
4/19/2013	7 hr***				6.1	120	
4/19/2013	8 hr				9.5	119	< 20

* Due to high TDS interference, the lab was unable to utilize a detection limit lower than 20 ppb.
** The well water has very low levels of nitrite, therefore nitrate+nitrite levels are very close to nitrate levels. These analytes (nitrate and nitrite) were not analyzed separately to reduce lab cost.
*** Inadvertently, the 7th hour sample was not collected. For reporting purposes and to develop breakthrough curves, nitrate+nitrite and sulfate levels for the 7th hour were taken as average of the 6th and the 8th hour.

Figure 9.1 : Nitrate Breakthrough Curve

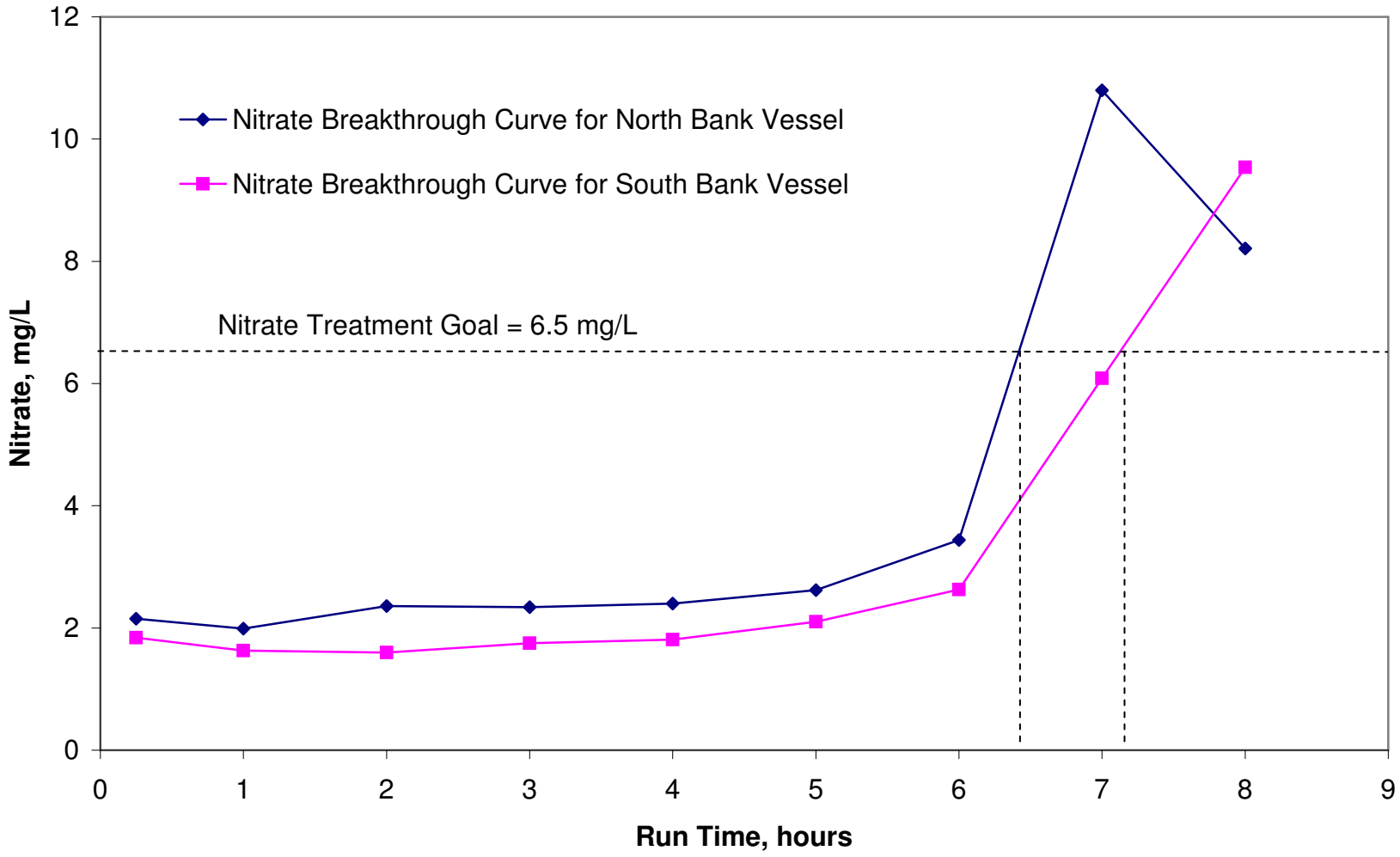

Figure 9.2 : Sulfate Breakthrough Curve

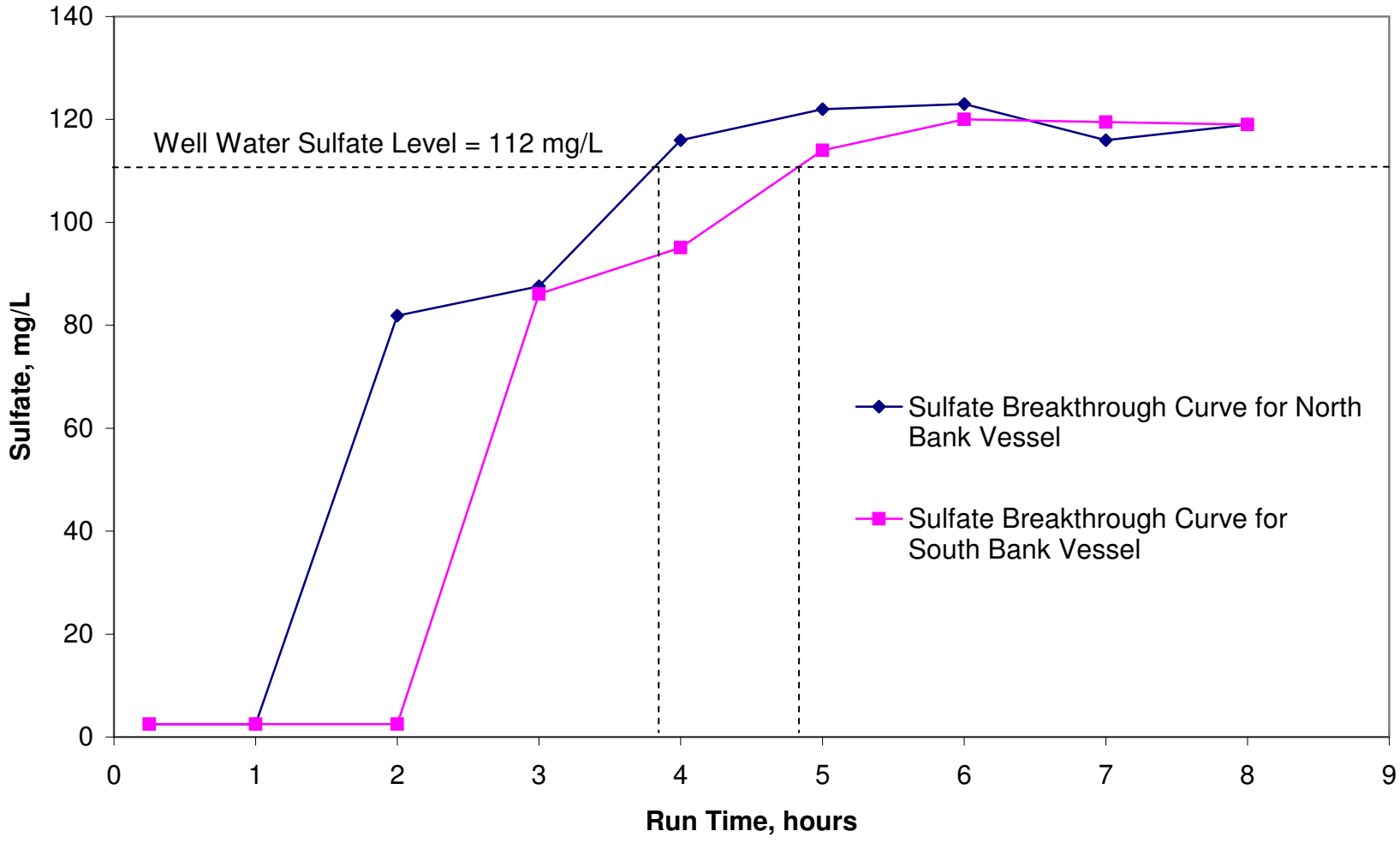

For the north bank vessel, Figure 9.2 shows an increase in treated water sulfate level from 88 mg/L at the third hour to well water sulfate level at the fourth hour. Similarly, an increase in treated water sulfate level from 95 mg/L at the fourth hour to well water sulfate level at the fifth hour was observed for the south bank vessel. This shows the sulfate breakthrough has occurred before the nitrate breakthrough for both vessels. Based on IX kinetics and selectivity sequence, the nitrate breakthrough occurs soon after the sulfate breakthrough. Once the run length is reduced as recommended above, the sulfate breakthrough curves should be developed again and its impact on nitrate breakthrough should be evaluated.

Tables 9.1 and 9.2 also show arsenic test results. Due to high TDS interference, the lab reported the arsenic level at a detection level of 20 ppb. The arsenic concentration in the treated water is expected to be less than 10 ppb, as the City indicated Well 8A does not have an arsenic issue.

Table 9.3 presents the cost impact due to reduced run length. It shows the annual cost of spent brine disposal and salt at a 20% well utilization rate and 6.5 hours run length would be $145,600. For cost calculation purposes, it was assumed the rinse effluent would be discharged to sewer and spent brine would be disposed of to a solid waste landfill. While there is a significant cost to reduce run length, it will reduce the potential to exceed the nitrate MCL.

The lab results for the regeneration/rinse streams are presented in Tables 9.4 and 9.5. These streams were analyzed for arsenic and TDS. The results show a TDS range of 35,100 to 254,000 mg/L for the waste going into the waste tanks. The results also show an arsenic level of < 20 mg/L (due to high TDS interference, the exact arsenic levels in the waste streams could not be determined). If the run length is reduced as discussed above, it is recommended to discharge the rinse effluent to the sewer and the spent brine to waste tanks followed by delivery to a solid waste landfill. It is also recommended the City develop a long term plan to reduce brine quantity and evaluate the alternate disposal methods to ensure sustainability.

9.1.1 Additional Process Optimization

Based on the above observations, additional optimization activities should be performed by the City:

- Implement optimization adjustments such as reduce run length and change in waste disposal method.
- Verify that implemented optimization adjustment is providing the desired results.
- Validate performance and develop new breakthrough curves.
- Explore spent brine reuse option (such as denitrification of spent brine using electrolysis). This would reduce considerably the spent brine quantity to be disposed of.
- Explore biological process for nitrate removal (strategies can be developed from the proposed Coldwater Booster Station pilot study).

9.2 EXPANSION OF TREATMENT FACILITIES

As indicated earlier, Well 8A is equipped with the ability to produce 3,000 gpm, however, due to limited capacity of the existing NTF, it is only pumping at 2,000 gpm. If Well 8A is required to produce at its full capacity, it will require more NTF and GAC facilities to handle the additional flow rate of 1,000 gpm. It is also important to note that the existing NTF is designed to treat only 1,300 gpm. The rest of the 700 gpm out of 2,000 gpm is bypassed and blended with the NTF treated water.

Table 9.3 : Reduced IX Run Length Cost Analysis

Description	Present IX Run Length of 9 Hours	Proposed IX Run Length of 6.5 Hours
Total Number of Vessels	18	18
Number of Vessels in Service	15	15
One Bed Volume, gallons	185	185
Amount of Spent Brine Generated during each Regeneration Cycle per Vessel, BVs	1	1
Amount of Spent Brine Generated during each Regeneration Cycle per Vessel, gallons	185	185
As Brine is used twice, the Amount of Spent Brine Generated during Each Regeneration Cycle per Vessel, gallons	92.5	92.5
Amount of Rinse Effluent Generated during each Rinse Cycle, BVs	0.55	0.55
Amount of Rinse Effluent Generated during each Rinse Cycle, gallons	101.8	101.8
Salt Concentration (to be used for regeneration), %	13	13
Amount of 13% Brine Required for Each Vessel during Regeneration Cycle, BVs	1	1
Volume of 13% Brine Required for Each Regeneration Cycle, gallons	185	185
Mass of 13% Brine Required for Each Regeneration Cycle, lbs	1,543	1,543
Assuming Percentage Salt Concentration (to be supplied), %	100	100
Mass of 100% Salt Required for Each Regeneration Cycle, lbs	201	201
Brine Reuse Frequency	2	2
Mass of 100% Salt Required for Each Regeneration Cycle, lbs	100	100
Salt Required and Waste Generated at 100% Utilization Rate		
Run Length, hours	9	6.5
Number of Vessels in Service	15	15
# of Regeneration/Rinse Cycle Each Day Each Vessel	2.7	3.7
Amount of Spent Brine Generated, gpd	3,700	5,100
Amount of Rinse Effluent Generated, gpd	4,100	5,600
Amount of 100% Salt Required Each Day, lbs	4,000	5,600
Amount of 100% Salt Required Each Day, tons	2.0	2.8
O&M Cost at 20% Utilization Rate	20	20
Unit Cost of Waste Disposal, $/gallon	$0.35	$0.35
Annual Cost of Waste Disposal at 20% Utilization Rate, $/yr	$94,500	$130,300
Unit Cost of Salt, $/ton	$75	$75
Annual Cost of Salt at 20% Utilization Rate, $/yr	$11,000	$15,300
	$105,500	**$145,600**

Notes:

1. There should be an insignificant impact on energy, labor, and resin replacement costs, if IX run length is reduced.

Table 9.4 : North Bank Vessel - Regeneration/Rinse Streams Characterization

Date	Steps	Bed Volumes (BVs)	Tag ID	Sample Location	Direction of Flow	Arsenic, mg/L*	TDS, mg/L
3/14/2013	Step 1: Salt Addition - Recover to Salt Tank	0.15 BVs	S1-RGN2	Regen 2 Vessel Effluent	Regen 2 Eff to Regen 1 Ves	< 20	199,000
3/14/2013	Step 2: Salt Addition - To Waste	0.9 BVs	S2-RGN2	Regen 2 Vessel Effluent	Regen 2 Eff to Regen 1 Ves	< 20	247,000
			S2-RGN1	Regen 1 Vessel Effluent	Regen 1 Eff to Waste	< 20	42,200
3/14/2013	Step 3: Salt Addition - Contact Time	3 Minutes	No sampling required.				
3/14/2013	Step 4: Water Addition	0.1 BVs	S4-RGN2	Regen 2 Vessel Effluent	Regen 2 Eff to Regen 1 Ves	< 20	246,000
			S4-RGN1	Regen 1 Vessel Effluent	Regen 1 Eff to Waste	< 20	188,000
3/14/2013	Step 5: Water Addition - Contact Time	This step was not performed by the NTF PLC.	No sampling required.				
3/14/2013	Step 6: Flow to Waste	0.55 BVs	S6-RNS1	Rinse 1 Effluent	Rinse 1 Eff to Waste	< 20	250,000
3/14/2013	Step 7: Recover to Salt Tank	Fill the salt tank to marked level.	S7-RNS1	Rinse 1 Effluent	Rinse 1 Eff to Salt Tank	< 20	35,100
3/14/2013	Step 8: Flow to Waste	-	S8-RNS1	Rinse 1 Effluent	Rinse 1 Eff to Waste	< 20	39,900
3/21/2013	Composite Waste Sample	-		Waste Tank	Waste Tank	< 20	139,000

* Due to high TDS interference, the lab was unable to analyze the samples with a detection limit lower than 20 mg/L.

Salt Concentration used for Regeneration

Date	Sample Type	Sodium, mg/L	Chloride, mg/L	Salt Concentration, %
3/14/2013	Brine Sample	60,700	610,000	15

Table 9.5 : South Bank Vessel - Regeneration/Rinse Streams Characterization

Date	Steps	Bed Volumes (BVs)	Tag ID	Sample Location	Direction of Flow	Arsenic, mg/L*	TDS, mg/L
3/21/2013	Step 1: Salt Addition - Recover to Salt Tank	0.15 BVs	S1-RGN2	Regen 2 Vessel Effluent	Regen 2 Eff to Regen 1 Ves	< 20	251,333
3/21/2013	Step 2: Salt Addition - To Waste	0.9 BVs	S2-RGN2	Regen 2 Vessel Effluent	Regen 2 Eff to Regen 1 Ves	< 20	264,000
			S2-RGN1	Regen 1 Vessel Effluent	Regen 1 Eff to Waste	< 20	49,710
3/21/2013	Step 3: Salt Addition - Contact Time	3 Minutes	No sampling required.				
3/21/2013	Step 4: Water Addition	0.1 BVs	S4-RGN2	Regen 2 Vessel Effluent	Regen 2 Eff to Regen 1 Ves	< 20	264,000
			S4-RGN1	Regen 1 Vessel Effluent	Regen 1 Eff to Waste	< 20	228,000
3/21/2013	Step 5: Water Addition - Contact Time	This step was not performed by the NTF PLC.	No sampling required.				
3/21/2013	Step 6: Flow to Waste	0.55 BVs	S6-RNS1	Rinse 1 Effluent	Rinse 1 Eff to Waste	< 20	254,000
3/21/2013	Step 7: Recover to Salt Tank	Fill the salt tank to marked level.	S7-RNS1	Rinse 1 Effluent	Rinse 1 Eff to Salt Tank	< 20	74,500
3/21/2013	Step 8: Flow to Waste	-	S8-RNS1	Rinse 1 Effluent	Rinse 1 Eff to Waste	< 20	149,000
3/21/2013	Composite Waste Sample	-		Waste Tank	Waste Tank	< 20	142,000

* Due to high TDS interference, the lab was unable to analyze the samples with a detection limit lower than 20 mg/L.

Salt Concentration used for Regeneration

Date	Sample Type	Sodium, mg/L	Chloride, mg/L	Salt Concentration, %
3/21/2013	Brine Sample	52,400	260,000	13

The combined treated water of 2,000 gpm is then sent to the GAC facility. Per discussions with the City, the following cost scenarios were developed:

1. Option 1 - Additional 1,000 gpm IX System and 1,000 gpm GAC System
2. Option 2 - Additional 1,700 gpm IX System and 1,000 gpm GAC System (full stream treated)
3. Option 3 - New 3,000 gpm IX System and 1,000 gpm GAC System (full stream treated)

The existing NTF and GAC facilities can not be modified to accommodate the additional flow rate due to the following:

- No space available inside the trailer housing the existing NTF.
- The existing IX vessels are already designed at a high loading rate, additional flow can not be pushed through these vessels.
- The existing GAC facility is located within an open vault which may be difficult to expand.
- The existing GAC facility can not handle more flow as it will reduce the EBCT and treatment efficiency.

The existing NTF system uses a SBA resin for nitrate removal. For the proposed IX NTF systems, the same resin type is proposed, however, the recommended design parameters are different. The existing NTF is designed using a 12.3 gpm/ft^2 normal loading rate and 265 BVs, which are too high to ensure process reliability. The proposed NTF design parameters are as follows:

- Normal loading rate of 9.6 gpm/ft^2.
- Empty bed contact time of 2 minutes.
- Run length of 215 BVs (7.2 hours).
- Provisions for electrolytic denitrification of spent brine.
- Six reuses of brine.
- Use of 10% brine for regeneration.
- Segregation of spent brine from other waste (including backwash and rinse) and disposal to solid waste landfill.
- Additional backwash step (not performed in the existing NTF) to improve performance of the IX system.
- Segregation of backwash and rinse waste, and disposal to sewer.
- 2.2 BVs for regeneration, and 8 BVs for backwash, slow rinse and fast rinse cycles.

The proposed GAC facility is based on the design parameters of the existing GAC facility. The design parameters are as follows:

- Normal loading rate of 9 gpm/ft^2.
- Empty bed contact time of 3 minutes.
- Periodic backwash and discharge waste to sewer.
- Full treatment (entire 1,000 gpm would be treated).

Tables 9.6, 9.7, and 9.8 presents the capital, annual O&M, and 20-year present worth costs for the 1,000 gpm, 1,700 gpm, and 3,000 gpm IX systems, respectively. The annual O&M costs were calculated using a 20% well utilization rate. The 20-year present worth costs were calculated using a 5% interest rate. The capital and annual O&M costs for a 1,000 gpm GAC system were estimated at $550,000 and $23,000, respectively.

Table 9.6 : 1,000 gpm IX System Capital and Annual O&M Costs

Capital Cost

Inline Strainers Installed	$58,500
IX System Installed	$713,000
Brine Maker Tank Installed	$48,600
Spent Brine Handling System Installed	$20,400
Denitrification System Installed	$240,000
Backwash Equalization Tank Installed	$34,200
Equipment Subtotal	$1,114,700
Piping, I&C, and Electrical Allowance (40%)	$445,900
Sub-Total 1	$1,560,600
Contingency (20%)	$312,120
Sub-Total 2	$1,872,720
Taxes, Insurance, & Bonding (8.5%)	$159,200
Sub-Total 3	$2,031,920
Design and CM Fee (15%)	$304,800
Capital Cost	**$2,336,700**

Annual O&M Cost (at 20% Well Utilization Rate)

Annual Power Cost $/yr	$1,000
Annual Salt Cost, $/yr	$5,600
Annual Salt Delivery Cost, $/yr	$1,200
Annual O&M Cost for Denitrification System, $/yr	$20,000
Annual Brine Disposal Cost, $/yr	$62,700
Annual Resin Replacement Cost $/yr	$16,000
Total Estimated Labor Costs, $/yr	$72,800
Equipment Maintenance Costs, $/yr	$22,300
Annual O&M Cost, $/yr	**$201,600**

20-year Present Worth Cost	**$4,848,600**

Table 9.7 : 1,700 gpm IX System Capital and Annual O&M Costs

Capital Cost

Inline Strainers Installed	$87,750
IX System Installed	$842,500
Brine Maker Tanks Installed	$75,600
Spent Brine Handling System Installed	$32,400
Denitrification System Installed	$270,000
Backwash Holding Tank Installed	$63,000
Estimated IX Treatment Cost	$1,371,250
Piping, I&C, and Electrical Allowance (40%)	$548,500
Sub Total 1, $	$1,919,800
Contingency (20%)	$384,000
Sub Total 2, $	$2,303,800
Taxes, Insurance, & Bonding (8.5%)	$195,800
Sub Total 3, $	$2,499,600
Design and CM Fee (15%)	$374,900
Capital Cost	**$2,874,500**

Annual O&M Cost (at 20% Well Utilization Rate)

Annual Power Cost, $/yr	$800
Annual Salt Cost, $/yr	$10,300
Salt Delivery Fee, $/yr	$2,300
Annualized Resin Replacement Cost, $/yr	$22,200
Brine Disposal Cost, $/yr	$114,800
Annual O&M for Denitrification System, $/yr	$20,000
Total Estimated Labor Cost, $/yr	$98,800
Equipment Maintenance Cost, $/yr	$57,500
Annual O&M Cost, $/yr	**$326,700**

20-year Present Worth Cost, $	**$6,945,000**

Table 9.8 : 3,000 gpm IX System Capital and Annual O&M Costs

Capital Cost

Inline Strainers Installed	$117,000
IX System Installed	$1,298,800
Brine Maker Tanks Installed	$102,600
Spent Brine Handling System Installed	$51,600
Denitrification System Installed	$300,000
Backwash Holding Tank Installed	$113,400
Estimated IX Treatment Cost	$1,983,400
Piping, I&C, and Electrical Allowance (40%)	$793,400
Sub Total 1, $	$2,776,800
Contingency (20%)	$555,400
Sub Total 2, $	$3,332,200
Taxes, Insurance, & Bonding (8.5%)	$283,200
Sub Total 3, $	$3,615,400
Design and CM Fee (15%)	$542,300
Capital Cost	**$4,157,700**

Annual O&M Cost (at 20% Well Utilization Rate)

Annual Power Cost, $/yr	$900
Annual Salt Cost, $/yr	$18,300
Salt Delivery Fee, $/yr	$4,100
Annualized Resin Replacement Cost, $/yr	$35,300
Brine Disposal Cost, $/yr	$205,000
Annual O&M for Denitrification System, $/yr	$20,000
Total Estimated Labor Cost, $/yr	$114,400
Equipment Maintenance Cost, $/yr	$83,200
Annual O&M Cost, $/yr	**$481,200**

20-year Present Worth Cost, $	**$10,153,000**

Table 9.9 presents the capital, annual O&M, and 20-year present worth costs for the IX and GAC systems together. The capital costs ranged from $2.9 million to $4.7 million depending on how much flow is treated. The capital costs shown in Table 9.9 do not include a building to house the proposed IX and GAC systems. It is assumed that both of the IX and GAC systems would be located outside in the yard.

Recently, Well 24 nitrate levels have been trending upward (approaching 8 mg/L). Given this development, it is desirable to provide full stream treatment for Well 8A and blend with Well 24 water. If full stream treatment is utilized, Option 1 (Additional 1,000 gpm IX System and 1,000 gpm GAC System) can not be implemented as the existing NTF only treats 1,300 gpm. In order to provide full stream nitrate treatment for Well 8A, an additional 1,700 gpm NTF would be required (or a 3,000 gpm NTF system if the existing NTF is removed). However, the GAC facility needs to be designed for additional 1,000 gpm only. The capital and annual O&M costs for Option 2 (Additional 1,700 gpm IX System and 1,000 gpm GAC System) were calculated at $3.4 million and $349,700, respectively, (plus O&M costs for the existing 1,300 gpm IX system and 2,000 gpm GAC system). The capital and annual O&M costs for Option 3 (New 3,000 gpm IX System and 1,000 gpm GAC System) were calculated at $4.7 million and $504,200, respectively, (plus O&M costs for the existing 2,000 gpm GAC system). The capital cost for Option 3 is 1.4 times the capital cost for Option 2. The annual O&M costs for Options 2 and 3 would almost be the same. As the existing NTF equipment (vessels, piping, valves, waste tanks, brine tank) are in good condition, it is recommended to utilize the existing NTF for its full useful life. Based on cost and non cost factors associated with Options 2 and 3, the Option 2 is recommended for the Gateway treatment expansion. The 20-year present worth cost for Option 2 is $7.8 million.

Figures 9.3 and 9.4 present the process schematic and site plan for the proposed 1,700 gpm IX system and 1,000 gpm GAC system. The proposed NTF and GAC facilities would include the following:

- Three 10-inch inline strainers (two in operation, one standby).
- Three 11-foot diameter IX vessels (two in operation, one standby).
- Two 30 ton brine maker tank with two brine feed pumps (one in operation, one standby).
- One 5,000 gallon brine recycle tank.
- One 11,000 gallon spent brine holding tank with two brine disposal pumps (one in operation, one standby).
- One brine denitrification system to allow reuse of spent brine.
- One 35,000 gallon backwash equalization tank.
- One 12-foot diameter GAC vessel and piping manifold.

As shown on the proposed site plan, the City would have to acquire additional land (approximately 40 feet x 195 feet) on the east side of the existing site. The cost of additional land is estimated at $125,000.

Table 9.9 : IX and GAC Systems Cost Scenarios

Capital Costs

Scenarios	1,000 gpm IX System	1,700 gpm IX System	3,000 gpm IX System
IX System Capital Cost	$2,336,700	$2,874,500	$4,157,700
1,000 gpm GAC System Capital Cost	$550,000	$550,000	$550,000
Total Capital Cost	**$2,886,700**	**$3,424,500**	**$4,707,700**

Annual O&M Costs

Scenarios	1,000 gpm IX System[1]	1,700 gpm IX System[1]	3,000 gpm IX System[2]
IX System Annual O&M Cost	$201,600	$326,700	$481,200
1,000 gpm GAC System Annual O&M Cost	$23,000	$23,000	$23,000
Total Annual O&M Cost	**$224,600**	**$349,700**	**$504,200**
20-year Present Worth Cost	**$5,685,200**	**$7,781,800**	**$10,990,000**

1. Plus O&M costs for the existing 1,300 gpm IX system and 2,000 gpm GAC system.
2. Plus O&M costs for the existing 2,000 gpm GAC system.

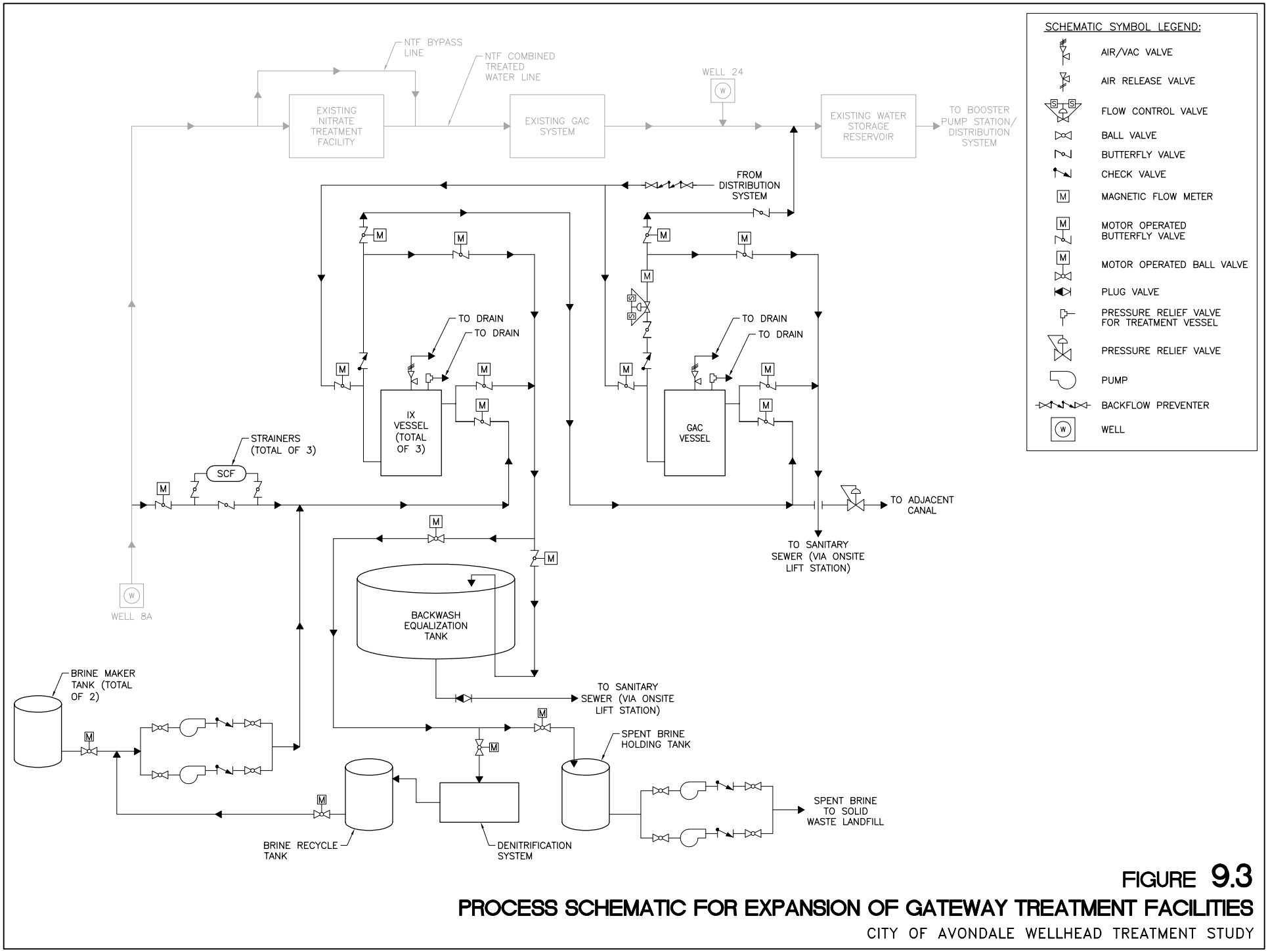

FIGURE 9.3

PROCESS SCHEMATIC FOR EXPANSION OF GATEWAY TREATMENT FACILITIES

CITY OF AVONDALE WELLHEAD TREATMENT STUDY

NCS Engineers

Nov 01, 2013 – 2:47pm
Z:\0445 – City of Avondale – Wellhead Treatment Study\CAD\Draft Final Report\FIGURE 9.3 – PROCESS SCHEMATIC FOR EXPANSION OF TREATMENT FACILITIES.dwg

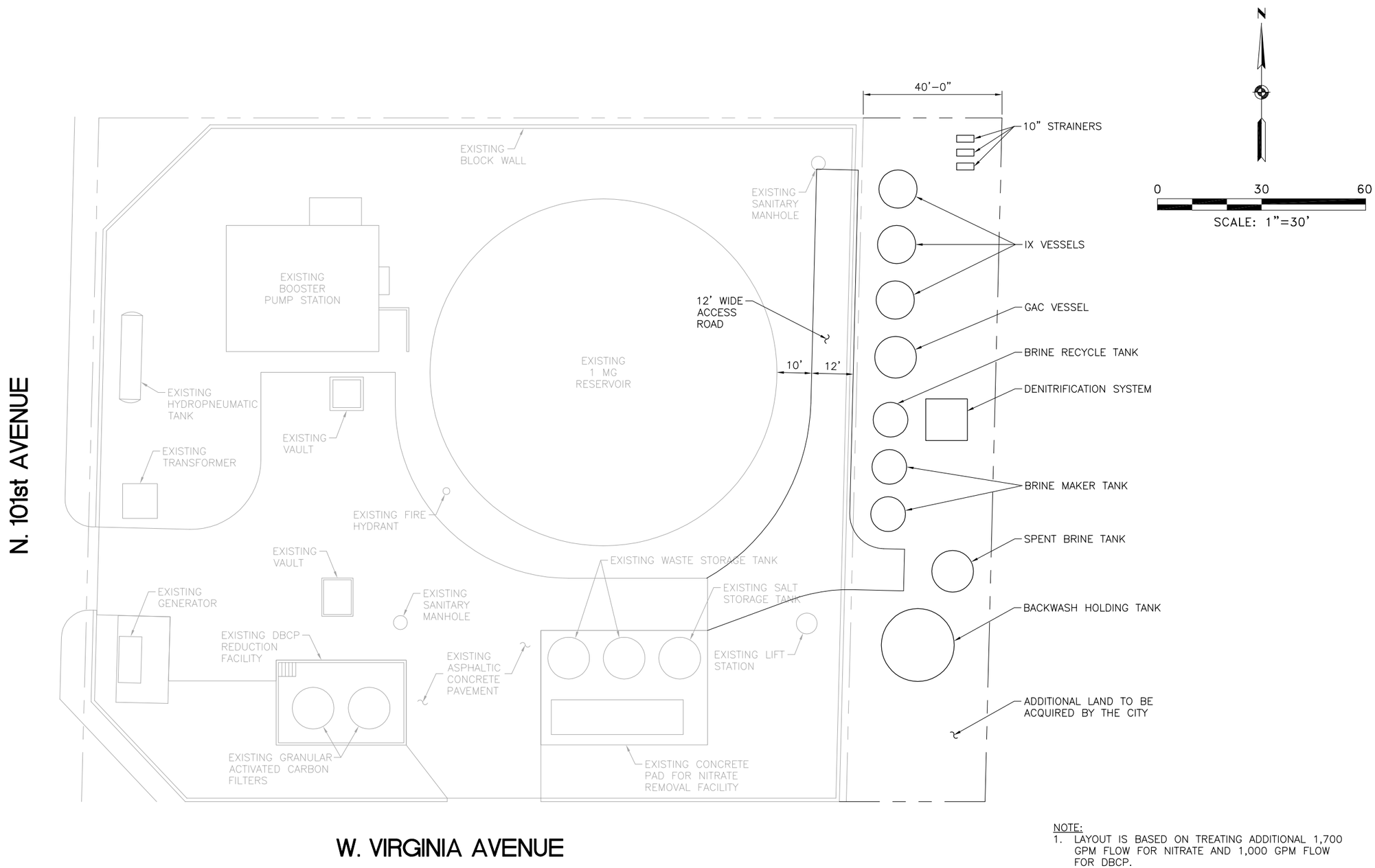

NOTE:
1. LAYOUT IS BASED ON TREATING ADDITIONAL 1,700 GPM FLOW FOR NITRATE AND 1,000 GPM FLOW FOR DBCP.

FIGURE 9.4

PROPOSED SITE PLAN FOR ADDITIONAL GATEWAY TREATMENT FACILITIES

CITY OF AVONDALE WELLHEAD TREATMENT STUDY

NCS Engineers

9.3 SUMMARY AND CONCLUSIONS

Based on the above discussion, the following conclusions are made:

- Based on cost and non cost factors, Option 2 (1,700 gpm IX system and 1,000 gpm GAC system) is proposed for Gateway treatment expansion. The City would have to acquire additional land (approximately 40 feet x 195 feet) on east side of the Gateway site to accommodate new treatment facilities. For Option 2, the capital and annual O&M costs would be $3.4 million and $349,700, respectively, (plus existing IX and GAC system O&M costs). The cost of additional land is estimated at $125,000, bringing the total capital cost associated with the Gateway treatment expansion to $3.5 million. The capital and annual O&M costs correspond to $2.46/gpd increase in water capacity and $3.33/1,000 gallons total water produced (only for increase in water capacity), respectively.
- If a primary MCL for Cr-VI is promulgated and Well 24 Cr-VI levels are above the primary MCL, there are two ways to address this issue: blending or wellhead treatment. Blending would be an option only if Well 8A produces at 3,000 gpm. The blended water (Wells 8A + Well 24) Cr-VI level would be approximately 7.7 ppb. If a wellhead treatment facility is needed to address the Cr-VI issue, the capital and annual O&M costs for Cr-VI treatment facility are estimated at $2.3 million and $235,000, respectively. Refer to Chapter 4 for a discussion on Cr-VI treatment and cost details. The City would have to acquire land, approximately 100 feet x 100 feet, adjacent to the well site for the construction of Cr-VI treatment facility (this is in addition to the land acquisition at the Gateway site). The cost of additional land at Well 24 is estimated at $125,000 (assuming that the City would have to acquire a minimum of 0.5 acre parcel). Therefore, the total capital cost of the project would be $2.4 million ($2.3 million for treatment + $125,000 for land).
- The proposed NTF and GAC facilities (to accommodate the additional flow rate from Well 8A) will improve the overall water system reliability by providing additional water to the system.

9.4 RECOMMENDATIONS

Based on the above discussion, NCS recommends the following:

- Based on the process optimization testing, it was determined that the current run length of 265 BVs for the existing NTF is too long and may lead to elevated nitrate levels in the combined treated water. The run length should be reduced to 183 BVs. Implementation of this process optimization strategy would allow the existing NTF to run more reliably. The City should field test and adjust the reduced run length to meet the combined treated water nitrate goal of 8 mg/L. If the run length is reduced, other set points may need to be adjusted such that no more than three vessels are out of service at any given time. The City should validate performance and develop new breakthrough curves.
- The City should develop a strategy for the long term disposal of IX spent brine such as evaporation ponds.
- The City should explore the option of reusing IX spent brine (such as electrolytic denitrification of spent brine). It would allow reuse of the brine several times thereby reducing considerably the spent brine quantity to be disposed of. This is proposed to be in included in the CBS pilot study.
- The City should also evaluate the biological process for nitrate removal (strategies can be developed from the proposed CBS pilot study).

CITY OF AVONDALE
WELLHEAD TREATMENT STUDY

FINAL REPORT

CHAPTER 10 - SUMMARY OF WELLHEAD TREATMENT STRATEGIES AND TEN YEAR INFRASTRUCTURE PLAN

TABLE OF CONTENTS

10.0 INTRODUCTION 10-1

10.1 WELLHEAD TREATMENT STRATEGIES AND RELIABILITY 10-1

10.2 PRIORITIZATION OF WELLHEAD TREATMENT 10-3

10.3 TEN YEAR INFRASTRUCTURE PLAN 10-4

LIST OF TABLES

Table 10.1 List of Sites 10-1

Table 10.2 Prioritization of Proposed Treatment Strategies . . . . . After 10-3

Table 10.3 10-Year Infrastructure Plan . . . . . After 10-4

Table 10.4 Additional Potential CIP Projects (2014 - 2023) 10-5

CITY OF AVONDALE
WELLHEAD TREATMENT STUDY

FINAL REPORT

CHAPTER 10 - SUMMARY OF WELLHEAD TREATMENT STRATEGIES AND TEN YEAR INFRASTRUCTURE PLAN

10.0 INTRODUCTION

Based on the analyses performed in Chapters 3 to 9, this chapter summarizes recommended wellhead treatment strategies for each impacted EPDS. It also includes the prioritized order of projects for the 10-year infrastructure plan.

10.1 WELLHEAD TREATMENT STRATEGIES AND RELIABILITY

Table 10.1 summarizes the sites which were evaluated in this study. Based on operational and water quality issues, a site specific solution is recommended for each site. The implementation of these solutions will allow the City to operate these facilities more reliably, improve water quality, and increase water capacity.

Table 10.1 : List of Sites

EPDS #	EPDS Name	Existing Wells	Future Wells	Current Water Quality Issues	Future Potential Water Quality Issues
5	Coldwater Booster Station	15, 16, 25	16b, 22, 26, Pecan Groves Replacement Well	Nitrate	Cr-VI
7	Gateway Water Production Facility	8A, 24		Nitrate, DBCP	Cr-VI
8	Garden Lakes Water Production Facility	17		Nitrate	Cr-VI
9	Del Rio Booster Station	21, 28		Iron, TDS, Nitrate	
Not Assigned	Not Assigned	14		Arsenic	Cr-VI

An expanded discussion of treatment options and a recommended treatment strategy for each EPDS was provided in previous chapters. The following is a summary of recommended treatment strategies by site:

Coldwater Booster Station: At present, this site receives water from Wells 15, 16, and 25, and operates under a nitrate blending plan. However, due to high nitrates, Wells 15 and 25 cannot be operated independently. These wells are always run in conjunction with Well 16 to provide sufficient blending. If Well 16 is down, the CBS facility currently will not produce water. Therefore, it is proposed to construct a NTF at the CBS. This will allow the wells to run independent of each other thereby improving reliability of the site. Addition of future wells (Wells

16b, 22, 26, and Pecan Groves Replacement Well) will increase the CBS water production capacity by 4,250 gpm. It is recommended the City perform pilot testing for both biological and IX with nitrate selective resin technologies. The most feasible technology shall be considered for the proposed NTF. For CIP planning purposes, the IX system is considered as the proposed nitrate treatment approach.

Depending on future chromium-VI (Cr-VI) regulations, Wells 15 and 26 may have a Cr-VI issue. If nitrate treatment at the CBS is performed using IX technology, a separate Cr-VI treatment facility will not be required. The proposed IX treatment facility would reduce Cr-VI levels below the assumed primary MCL of 10 ppb. However, if nitrate treatment is performed using biological treatment, blending would be a potential solution for addressing a Cr-VI issue.

Gateway Water Production Facility: The Gateway facility receives water from Wells 8A and 24. At present, Well 8A is equipped with a 3,000 gpm pump, however, due to the limited capacity of the existing NTF, a valve on the well header is partially closed so the well only pumps at 2,000 gpm. The existing NTF can handle a flow of 1,300 gpm (with 700 gpm bypassed and blended with the treated water). It is proposed to construct an additional 1,700 gpm NTF and 1,000 gpm dibromo-chloropropane (DBCP) treatment facility at this site. The additional treatment facility will reduce the backpressure on the well pump and provide additional water capacity. IX and GAC systems are proposed for the nitrate and DBCP removal, respectively. The City would have to acquire additional land adjacent to the Gateway site for the construction of proposed IX and GAC systems.

Due to elevated nitrate levels, it is recommended to reduce the run length at the existing IX NTF. The reduced run length will allow the City to keep treated water nitrate levels below the primary MCL and run the site more reliably.

Depending on the future Cr-VI regulation, Well 24 may have a Cr-VI issue. If Well 8A produces at 3,000 gpm, blending would be a potential solution for addressing a Cr-VI issue. Otherwise, wellhead treatment is recommended. The City would have to acquire additional land, approximately 100 feet x 100 feet, adjacent to the well site for the construction of Cr-VI treatment facility.

Garden Lakes Water Production Facility: The Garden Lakes facility receives water from Well 17 and treats it for nitrates. At present, the existing NTF is experiencing several regulatory and operational issues including a spent brine hazardous waste concern, elevated nitrate levels, and excess waste generation (due to extended rinse cycle). As Well 17 is the only well which supplies water to this site, if for any reason the NTF is not performing adequately, this site will not produce water. Therefore, it is important to run the existing NTF in a optimized and reliable manner. Several operational changes including reduced run length, segregation of waste stream, and disposal of rinse effluent to sewer are recommended for the existing NTF. The implementation of these changes will allow the City to run the site reliably.

Depending on the future Cr-VI regulation, Well 17 may have a Cr-VI issue; however, a separate Cr-VI treatment is not anticipated as the existing NTF should be able to reduce the Cr-VI level below the assumed primary MCL of 10 ppb.

Del Rio Booster Station: This site has been offline for several years due to poor water quality associated with Wells 21 and 28. Well 21 has elevated levels of nitrate, TDS, and iron. Well 28 has

elevated TDS levels, and marginal nitrate levels just below the primary MCL. It is proposed to construct an iron, TDS, and nitrate treatment facility at this site. For CIP planning purposes, chlorination with catalytic media filtration is recommended for iron removal, and RO is recommended for TDS and nitrate removal. The construction of proposed treatment facilities will allow the City to activate this site again and provide an additional water capacity of 1,900 gpm. It is recommended the City perform pilot testing for both RO and EDR technologies. The City should also pilot test a land application site as a long term disposal option for brine.

Well 14: This well has been inactive for several years due to high arsenic. It is proposed to construct an arsenic treatment facility at this site and reactivate the well. Adsorption using granular iron media is recommended as the proposed arsenic treatment technology. The construction of treatment facility will allow the City to activate the well and provide an additional water source of 450 gpm.

Depending on future Cr-VI regulation, Well 14 may have a Cr-VI issue. Wellhead treatment is recommended to address the potential Cr-VI issue. The City would have to acquire additional land, approximately 100 ft x 80 ft, adjacent to the well site for a Cr-VI treatment facility.

10.2 PRIORITIZATION OF WELLHEAD TREATMENT

Chapters 6 to 9 identified site specific treatment solutions. To determine a priority ranking for the treatment solutions, capital and annual O&M costs associated with each site were normalized. Table 10.2 presents the normalized costs for each site. The table does not include any costs associated with potential needs for Cr-VI treatment facilities based on future regulations. The following approach was utilized for the calculation of normalized costs:

Step 1: Tabulate the existing production capacity (Column "A" in Table 10.2), design capacity of proposed treatment facility (column "B" in the Table 10.2), increase in production capacity after the installation of proposed treatment facility (column "C"), and well utilization rate (column "E") from Chapters 6 to 9.

Step 2: Calculate total production capacity for each site (D = A + C).

Step 3: Calculate average increase in production capacity per EPDS and average well utilization rate per EPDS.

Step 4: Tabulate the capital and annual O&M costs for the proposed treatment facilities from Chapters 6 to 9. For the CBS and DBS treatment facilities, the capital costs also include the cost of pilot testing. The cost of pilot testing at CBS and DBS are estimated at $175,000 and $500,000, respectively. For the Gateway site, the capital cost also includes the cost of land ($125,000).

Step 5: Calculate the unit capital cost by dividing the capital cost by increase in per day production capacity.

Step 6: Calculate the unit O&M cost ($/1,000 gallons treated water produced) by dividing the annual O&M cost by annual increase in production capacity at the given utilization rate.

Step 7: The normalized capital cost was calculated by multiplying the unit capital cost by the average increase in production capacity.

Step 8: The normalized annual O&M cost was calculated by multiplying the unit O&M cost by the annual production at the average utilization rate.

Table 10.2 : Prioritization of Proposed Treatment Facilities

EPDS #	EPDS Name	Existing Wells	Existing Production Capacity, gpm	Future Wells	Contaminants to be Treated	Proposed Treatment	Design Capacity of Proposed Treatment Facility, gpm	Increase in Production Capacity after Installation of Treatment Facility, gpm	Total Production Capacity after Installation of Treatment Facility, gpm	Well Utilization Rate, %	Capital Cost with Pilot Testing Cost[3]	Annual O&M Cost[4]	Unit Capital Cost, $/gpd Increase in Water Capacity	Unit O&M Cost, $/1,000 gallon Total Water Produced	Normalized Capital Cost	Normalized Annual O&M Cost	Normalized 20-year Present Worth Cost
			A				B	C	D	E	F	G	H	I	J	K	L
5	Coldwater Booster Station	15, 16, 25	4,050	16b, 22, 26, Pecan Groves Replacement Well	Nitrate	IX	1,460	4,250	8,300	20	$3,608,400	$282,900	$0.59	$0.63	$1,613,200	$145,400	$3,425,000
Not Assigned	Not Assigned	Well 14	0		Arsenic	Adsorption	450	450	450	26	$802,100	$44,200	$1.24	$0.72	$3,386,600	$165,100	$5,444,000
7	Gateway Water Production Facility	8A, 24	2,750		Nitrate, DBCP	Additional IX + GAC	1.7000 gpm IX and 1,000 gpm GAC	1,000	3,750	20	$3,549,500	$349,700	$2.46	$3.33	$6,744,100	$764,100	$16,265,000
9	Del Rio Booster Station	21, 28	0		Iron, TDS, Nitrate	CCMF + RO	1200	1900	1900	26	$6,982,000	$459,000	$2.55	$1.77	$6,982,000	$406,000	$12,041,000
							Average =	**1,900**	**Average =**	**23**							

Notes:

1. The above capital costs do not include costs for well modifications and well collector pipelines. It was assumed that all the existing and future wells are in place and connected to the respective treatment sites.
2. The normalized costs are calculated for comparison purposes only. These costs are not the projected capital and annual O&M costs for the construction and O&M of the respective facilities.
3. The capital cost does not include the cost associated with chromium-VI treatment facility. For Coldwater and Del Rio booster stations, the pilot testing cost is added to the capital cost of the treatment facility. For Gateway site, the land cost is added to the capital cost of the treatment facility.
4. The annual O&M cost does include the cost associated with chromium-VI treatment facility.

Step 9: The normalized 20-year present worth cost was calculated using a 5% interest rate. The lowest normalized present worth cost means the highest financial benefit.

Based on above approach, the normalized 20-year present worth cost for the Coldwater Booster Station (CBS) nitrate treatment facility was calculated at $3.4 million and is the lowest. However, it is important to consider non-cost factors associated with each of the sites. The non-cost factors are discussed as below:

- In comparison to other City wells, Well 14 is a low producing well (production capacity 450 gpm only). Additionally, this well may have a Cr-VI issue which would require additional treatment and land acquisition.
- Presently, the CBS site receives water from Wells 15, 16, and 25. In the future, this site will receive water from Wells 16b, 22, 25, and the Pecan Groves Replacement Well. Many of the future wells would require installation of well collector pipelines, well modification, and well acquisition. This process could be time consuming and expensive.
- DBS has been offline for several years due to poor water quality associated with Wells 21 and 28 that feed the site. Also, Well 28 is a SRP owned shared well. During this study, neither the City nor SRP was able to run this well due to programming issues. Furthermore, the City has a concern of losing this well.
- The service area associated with the Gateway site has encountered low pressure issues. In order to boost pressure at the Gateway service area, the City operators run booster pumps in other parts of the City which causes significant energy losses. Expansion of the well and treatment facilities at this site would alleviate these pressure concerns.

Based on cost and non-cost factors associated with each site, the following prioritized order of construction is recommended:

1. Gateway nitrate and DBCP treatment facilities expansion.
2. CBS nitrate treatment facility.
3. DBS iron, nitrate, and TDS treatment facility.
4. Well 14 arsenic treatment facility.

The process optimizations are recommended for the Garden Lakes and Gateway NTFs, and are ongoing. As such these projects were not included in the prioritization evaluations. Although, these modifications will not increase production capacity it is recommended to implement these modifications as soon as possible.

10.3 TEN YEAR INFRASTRUCTURE PLAN

Table 10.3 presents the 10-year infrastructure plan based on the priority analysis performed in the above section. It does not take into account the financial impact of Cr-VI treatment as Cr-VI regulations are yet to be promulgated. The following wellhead treatment projects have been identified in order of priority:

1. Process optimizations (including set point changes and some reprogramming) at the Garden Lakes and Gateway nitrate treatment facilities.
2. Expansion of nitrate and DBCP treatment facilities at Gateway. The improvements would include 1,700 gpm IX facility and 1,000 gpm GAC facility. It would provide an additional

Table 10.3 : 10-Year Infrastructure Plan

Priority Ranking	Project to be Performed	Increase in Production Capacity, gpm	CIP Funds Required	CIP Funds Breakdown	Annual O&M Costs
1	Garden Lakes and Gateway Nitrate Treatment Facilities Process Optimizations	0	$100,000	Approximately $50,000 for each site	See Note 1
2	Expansion of Nitrate and DBCP Treatment Facilities at Gateway	1,000	$3,549,500	Design & Construction $3.4 million Land Cost $125,000 Pilot results from CBS can be utilized	$349,700
3	CBS Nitrate Treatment Facility	4,250	$3,608,400	Design & Construction $3.4 million Pilot testing at CBS $175,000	$282,900
4	DBS Iron, Nitrate, and TDS Treatment Facility	1,900	$6,482,000	Design & Construction $6.5 million Not including pilot testing cost	$459,000
5	Well 14 Arsenic Treatment Facility	450	$802,100	Design & Construction $802,100 No pilot testing required	$44,200
		Total	**$14,542,000**		

1. The annual O&M costs to be determined based on ongoing process optimization studies.

supply of 1,000 gpm. The capital cost for the expansion of Gateway treatment facilities was calculated at $3.5 million ($3.4 million for treatment facilities and $125,000 for land acquisition).

3. CBS nitrate treatment facility. The improvements would provide an additional supply of 4,250 gpm. The total capital cost for the CBS nitrate treatment facility was calculated at $3.6 million ($3.4 million for the nitrate treatment facility and $175,000 for pilot testing).
4. DBS iron, nitrate, and TDS treatment facility. The improvements would provide an additional supply of 1,900 gpm. The capital cost for the DBS treatment facility was calculated at $6.5 million (not including cost of pilot testing).
5. Well 14 arsenic treatment facility. The improvements would provide an additional supply of 450 gpm. The capital cost for the Well 14 arsenic treatment facility was calculated at $802,100.

Other potential CIP projects are (refer to Table 10.4):

1. It is recommended that City perform pilot testing at DBS for RO and EDR for TDS removal, and land application pilot testing for brine disposal. The approximate cost of pilot testing is $500,000. The RO and EDR pilot testing would take approximately three months. The land application pilot testing program would take approximately one year.
2. As a long term solution to spent brine disposal for the CBS site, an evaporation pond could be constructed for the proposed nitrate treatment facility. The capital cost for the evaporation pond was estimated at $500,000 ($300,000 for design and construction, and $200,000 for land acquisition). The approximate land area required would be 0.5 acres (including buffer space).
3. If the Cr-VI primary MCL is promulgated at 10 ppb, the City would need Cr-VI treatment facilities for Wells 14 and 24. The capital cost for Cr-VI treatment facilities was estimated at $2.4 million per well (including treatment and land).

Table 10.4 : Additional Potential CIP Projects (2014 - 2023)

Description	CIP Funds may be Required
RO, EDR, and Land Application Pilot Testing	$500,000
Evaporation Pond for CBS Nitrate Treatment Facility	$500,000
Well 14 Cr-VI Treatment Facility	$2,435,500
Well 24 Cr-VI Treatment Facility	$2,435,500
Total	**$5,371,000**

APPENDIX A

CITY OF AVONDALE WATER SYSTEM MAP

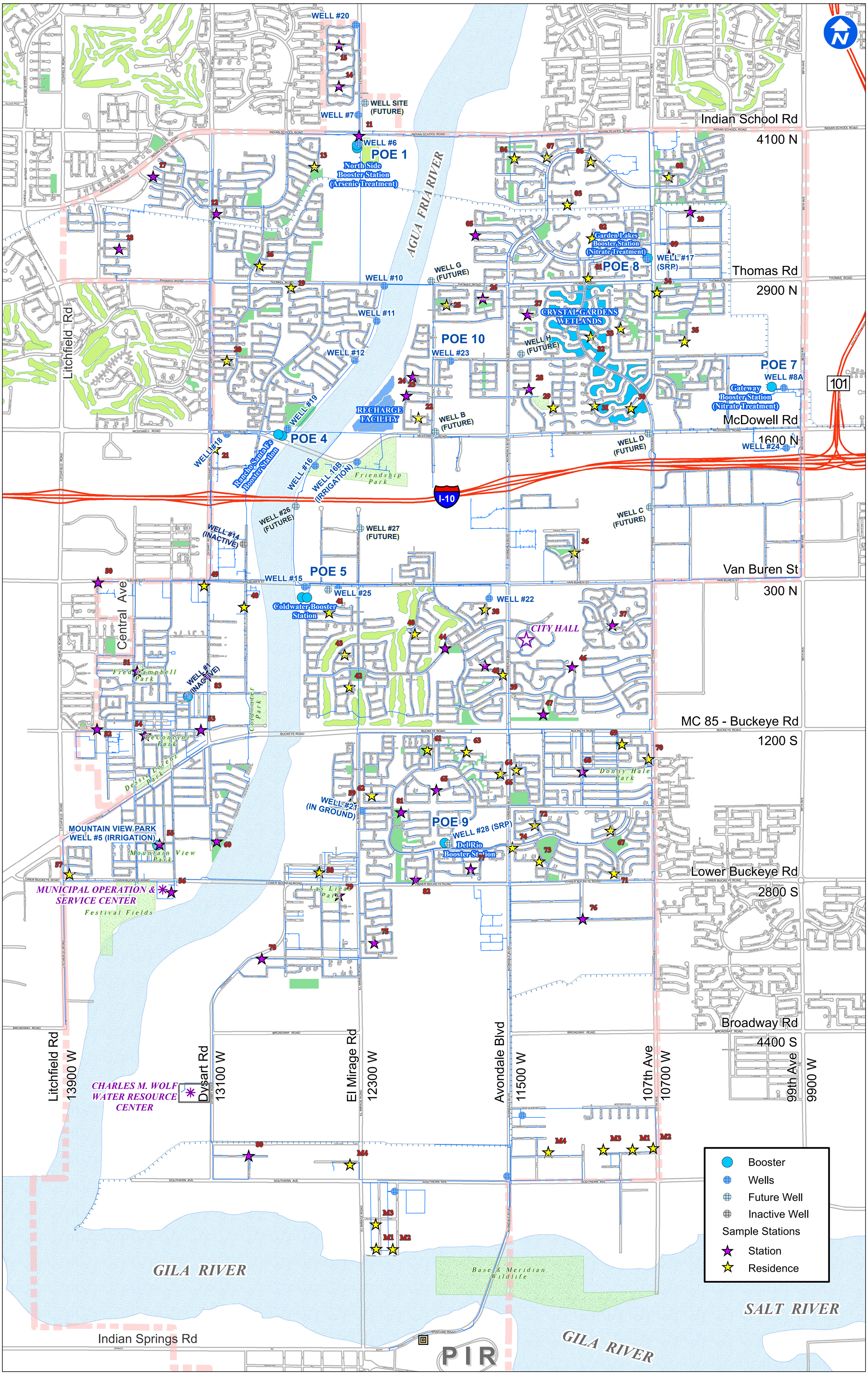

City of Avondale
Water System & Facilities

Updated January 2013
Map Produced by GIS Division of Public Works

APPENDIX B

GARDEN LAKES TESTING PROTOCOL

February 2013

Wellhead Treatment Study
Project# 13659C
Treatment Testing Protocol for Garden Lakes Nitrate Treatment Facility
City of Avondale

Test 1 - Establish Break-through Curve

1. Break-though curves will be established for two vessels, one from each bank (north and south banks as shown on the attached floor plan).
2. Tests will be performed on the north bank vessel on Day 1 and the south bank vessel on Day 2. One vessel from each bank will be selected for testing based on regeneration status and run time. Vessels with zero run time (immediately following regeneration/rinse) will be selected for testing (this information can be obtained from PLC).
3. For each vessel, Samples will be collected as per Tables 1 and 2 as follows:

Table 1: Break-through Curve for the Vessel from the North Bank

Date & Time	Hour	Well Water			Treated Water		
		Nitrate	Sulfate	Chromium	Nitrate	Sulfate	Chromium
	15 Min	X			X	X	X
	4 hr				X	X	
	8 hr				X	X	X
	12 hr				X	X	
	16 hr	X	X	X	X	X	X
	18 hr				X	X	
	20 hr				X	X	X
	22 hr				X	X	
	24 hr				X	X	X
	26 hr				X	X	

X indicates "Sample needs to be collected".

Table 2: Break-through Curve for the Vessel from the South Bank

Date & Time	Hour	Well Water			Treated Water		
		Nitrate	Sulfate	Chromium	Nitrate	Sulfate	Chromium
	15 Min	X			X	X	X
	4 hr				X	X	
	8 hr				X	X	X
	12 hr				X	X	
	16 hr	X	X	X	X	X	X
	18 hr				X	X	
	20 hr				X	X	X
	22 hr				X	X	
	24 hr				X	X	X
	26 hr				X	X	

X indicates "Sample needs to be collected".

4. Samples shall be labeled as follows: "Bank Location - Sample Type - Time"
   Abbreviations to be used:
   Well Sample: W
   Treated Water: T
   North Bank: NB
   South Bank: SB

   Example:
   Treated water sample collected at North Bank after 1 hr shall be labeled as "NB-T-1hr".

Test 2 - Determine Brine Concentration

1. Collect a brine sample which is getting fed into a vessel (Regen 2 Vessel) during regeneration cycle. This sample will be tested for Na and Cl contents (will need to provide lab with dilution factor based on expected concentration). This test can be performed either along with Test 1 or independently.

Test 3 - Regeneration & Rinse Streams Characterization

1. At present, the regeneration/rinse cycle is performed in eight steps (Steps 1 thru 5 for Regeneration, and Steps 6 to 8 for Rinse) as follows:

   - Step 1: Salt Addition - Recover to Salt Tank.
   - Step 2: Salt Addition - To Waste.
   - Step 3: Salt Addition - Contact Time.
   - Step 4: Water Addition.
   - Step 5: Water Addition - Contact Time.
   - Step 6: Flow to Waste.
   - Step 7: Recover to Salt Tank.
   - Step 8: Flow to Waste.

2. For the regeneration/rinse cycle, Samples will be collected as per Table 3.
3. The regeneration/rinse characterization tests will be performed for two sets of vessels, one set of vessels from each bank. As regeneration cycle includes two vessels in series, these two vessels are referred as "one set".
4. Tests will be performed on a set of north bank vessels on Day 1 and on a set of south bank vessels on Day 2. A set of vessels from each bank will be selected based on run time/Regen status. Out of two vessels selected in a set, one vessel shall be ready for Regen 1 step and another vessel shall be ready for Regen 2 step (this information can be obtained from PLC).
5. Apart from above samples, a composite spent brine sample will also be collected from the waste tank.

6. Above samples will be analyzed for parameters as mentioned in Table 3.
7. For each of the above step, sample locations are shown on the attached "Process Flow Diagram".
8. Samples shall be labeled as follows: "Bank Location - Tag ID - Cycle Status". Tag IDs are listed in Table 3.

   Abbreviations to be used:

North Bank	NB
South Bank	SB
Start of Step	S
Middle of Step	M
End of Step	E

   Example:
   Sample collected during Step 1 at the middle of the cycle shall be labeled as "NB-S1-RGN2–M".

Table 3: Regen/Rinse Streams Characterization

Date & Time	Steps	Tag ID	Flow Stream or Sample Location	Start of Step	Middle of Step	End of Step	Analytical Parameters
	Step 1: Salt Addition - Recover to Salt Tank	S1-RGN2	Flow coming out of Regen 2 Vessel	X	X	X	Chromium, Arsenic
	Step 2: Salt Addition - To Waste	S2-RGN1	Flow coming out of Regen 1 Vessel		X		Chromium, Arsenic
	Step 3: Salt Addition - Contact Time		No Sampling				
	Step 4: Water Addition	S4-RGN2	Flow coming out of Regen 2 Vessel	X	X	X	Chromium, Arsenic
		S4-RGN1	Flow coming out of Regen 1 Vessel	X	X	X	Chromium, Arsenic
	Step 5: Water Addition - Contact Time		No Sampling				
	Step 6: Flow to Waste	S6-RNS1	Flow coming out of Rinse 1 Vessel		X		Chromium, Arsenic, TDS
	Step 7: Recover to Salt Tank	S7-RNS1	Flow coming out of Rinse 1 Vessel		X		Chromium, Arsenic, TDS
	Step 8: Flow to Waste	S8-RNS1	Flow coming out of Rinse 1 Vessel		X		Chromium, Arsenic, TDS

X indicates "Sample needs to be collected".
S1 - Step 1, S2 - Step 2, and so forth
RGN - Regeneration, RNS - Rinse

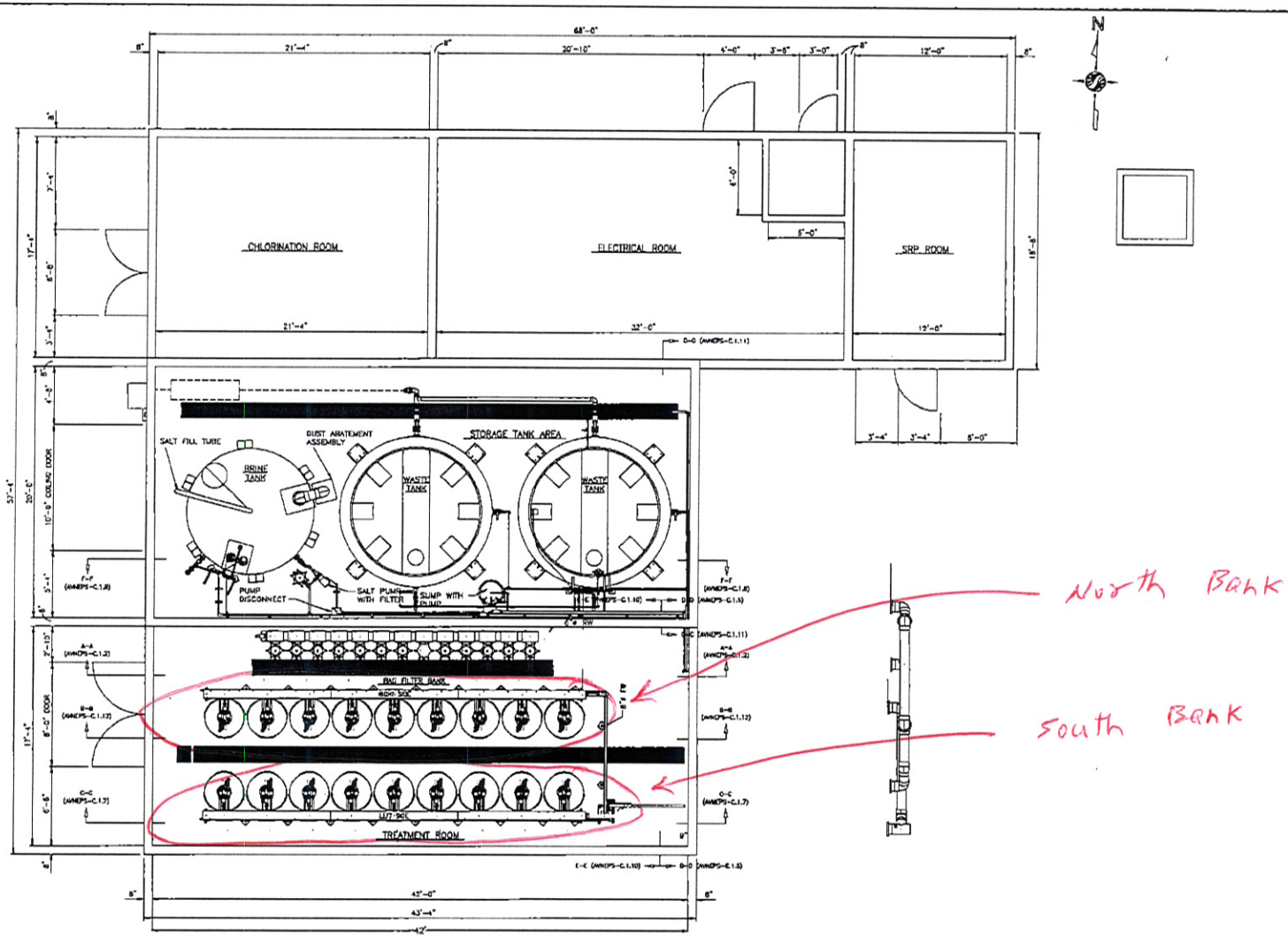

CONTROLS AND CHLORINE BUILDING FLOOR PLAN

REV	DATE	BY	DESCRIPTION
NC	12/20/04	WEM	ORIGINAL DRAWING

SCALE: $\frac{1}{4}$" = 1'

WARNING: 0 1/2 1 — IF THIS BAR DOES NOT MEASURE 1" THEN DRAWING IS NOT TO SCALE.

DESIGNED JKZ
DRAWN WEM
CHECKED RJZ

THIS INFORMATION IS PROPRIETARY TO BASINWATER AND MAY NOT BE RELEASED WITHOUT BASINWATER PERMISSION

ALL DIMENSIONS ± $\frac{1}{4}$" UNLESS SPECIFIED OTHERWISE

Basin Water
RANCHO CUCAMONGA, CA. • 909-481-9500 • WWW.BASINWATER.COM

DRAWING No.: AVNEPS-SL.1

CITY OF AVONDALE NORTHEAST PUMP STATION
EQUIPMENT LAYOUT WITH 3D MODEL

W:\CAD\Avondale NE PS - proposal\Construction\AVNEPS-SL.1.dwg, 4/15/2005 12:36:02 PM

EXT STEP 1 REGEN
SALT ADDITION, RECOVER TO SALT TANK

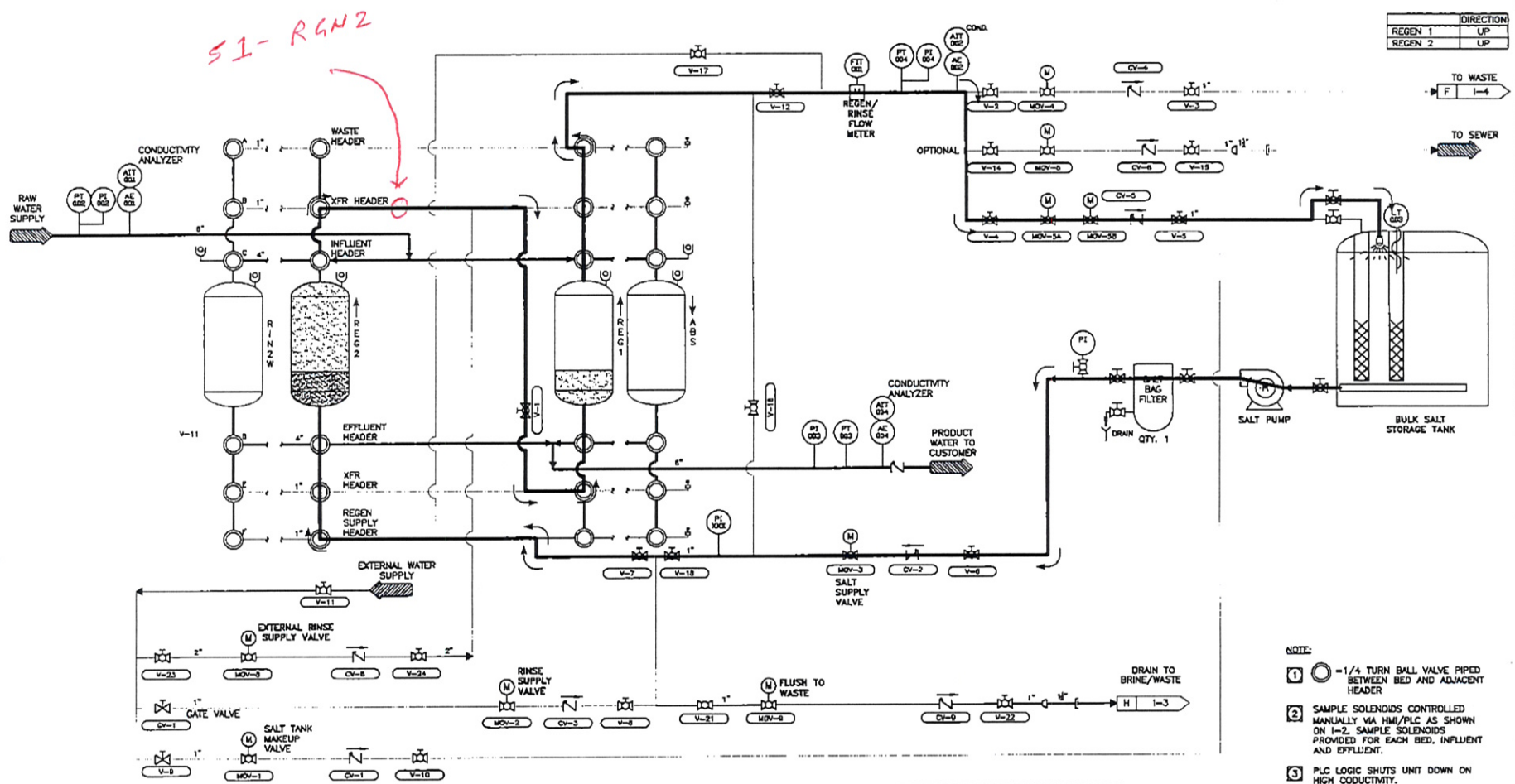

	DIRECTION
SATURATED SALT	
SALT WATER MIXTURE	
CLEAN WATER	

	DIRECTION
REGEN 1	UP
REGEN 2	UP

NOTE:

1. = 1/4 TURN BALL VALVE PIPED BETWEEN BED AND ADJACENT HEADER
2. SAMPLE SOLENOIDS CONTROLLED MANUALLY VIA HMI/PLC AS SHOWN ON I-2. SAMPLE SOLENOIDS PROVIDED FOR EACH BED, INFLUENT AND EFFLUENT.
3. PLC LOGIC SHUTS UNIT DOWN ON HIGH CODUCTIVITY.

REGEN/RINSE FLOW SCHEMATIC

	V-1	V-2	V-3	V-4	V-5	V-6	V-7	V-8	V-9	V-10	V-11	V-12	V-14	V-15	V-16	V-17	V-18
UP FLOW	OPEN	OPEN	OPEN	OPEN	OPEN	OPEN	OPEN	OPEN	OPEN	OPEN	OPEN	OPEN	OPEN	OPEN	CLOSED	CLOSED	OPEN
DOWN FLOW	OPEN	OPEN	OPEN	OPEN	OPEN	OPEN	CLOSED	OPEN	OPEN	OPEN	OPEN	CLOSED	OPEN	OPEN	OPEN	OPEN	OPEN

REV	DATE	BY	DESCRIPTION
0	04/13/05	MDM	ADDED UP EXT STEPS
N/C	02/22/04	JKZ	ORIGINAL DRAWING

SCALE: NOT TO SCALE

WARNING: 0 1/2 1 — IF THIS BAR DOES NOT MEASURE 1" THEN DRAWING IS NOT TO SCALE.

DESIGNED JKZ
DRAWN MDM
CHECKED BJZ

THIS INFORMATION IS PROPRIETARY TO BASINWATER AND MAY NOT BE RELEASED WITHOUT BASINWATER PERMISSION

Basin Water

DRAWING No.: I-1

REGEN/RINSE FLOW SCHEMATIC

W:\Projects\Avondale-HEPS\Standard DHS Submittal\Section 6 - STD Regeneration & Rinsing Summary\I-1Rev6.dwg, 4/12/2005 12:30:43 PM

EXT STEP 2 REGEN
SALT ADDITION, TO WASTE

52-RGN 1

SATURATED SALT	
SALT WATER MIXTURE	
CLEAN WATER	

	DIRECTION
REGEN 1	UP
REGEN 2	UP

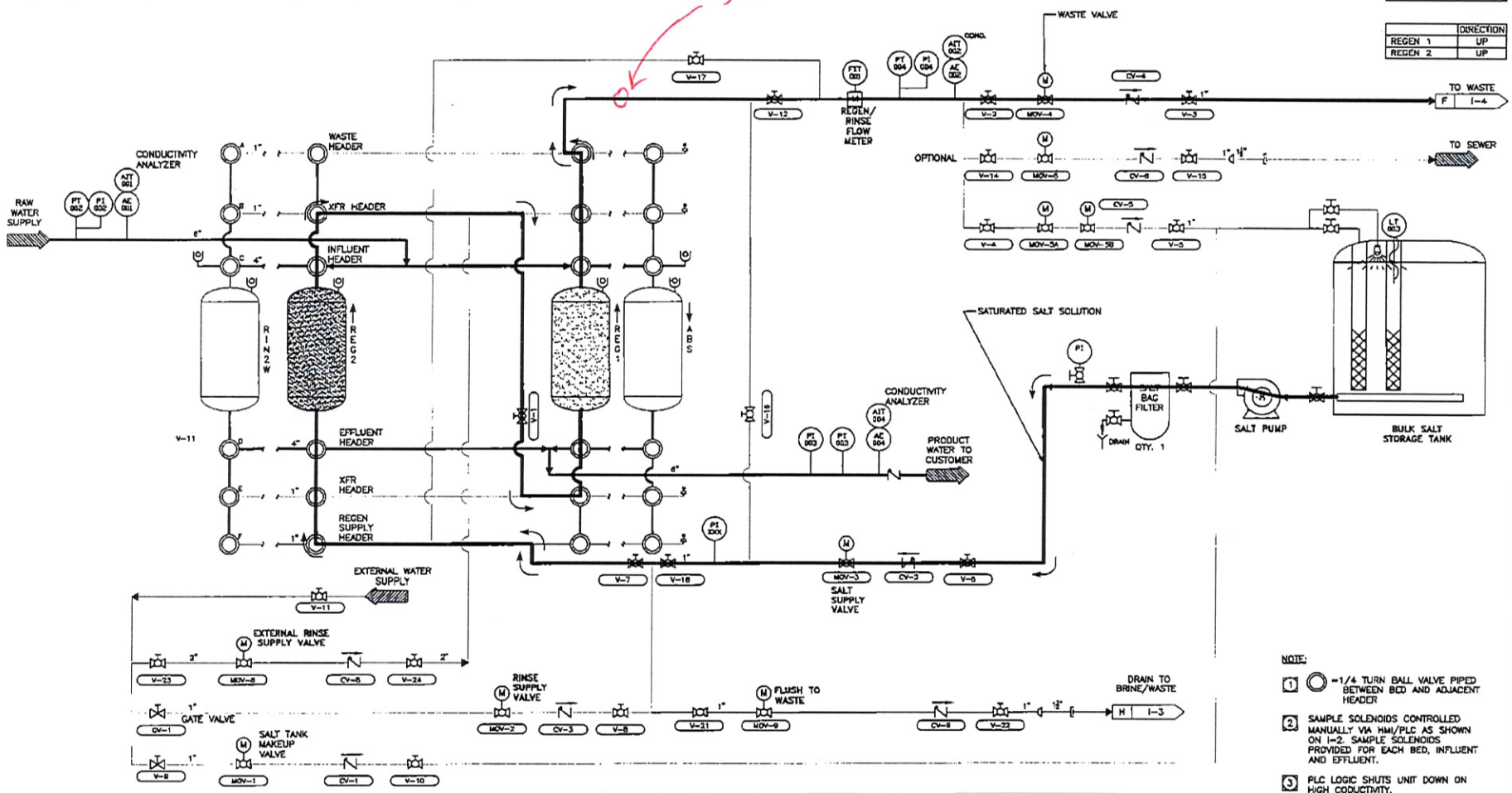

NOTE:

1. ◯ = 1/4 TURN BALL VALVE PIPED BETWEEN BED AND ADJACENT HEADER
2. SAMPLE SOLENOIDS CONTROLLED MANUALLY VIA HMI/PLC AS SHOWN ON I-2. SAMPLE SOLENOIDS PROVIDED FOR EACH BED, INFLUENT AND EFFLUENT.
3. PLC LOGIC SHUTS UNIT DOWN ON HIGH CODUCTIVITY.

REGEN/RINSE FLOW SCHEMATIC

	V-1	V-2	V-3	V-4	V-5	V-6	V-7	V-8	V-9	V-10	V-11	V-12	V-14	V-15	V-16	V-17	V-18
UP FLOW	OPEN	OPEN	OPEN	OPEN	OPEN	OPEN	OPEN	OPEN	OPEN	OPEN	OPEN	OPEN	OPEN	OPEN	CLOSED	CLOSED	OPEN
DOWN FLOW	OPEN	OPEN	OPEN	OPEN	OPEN	OPEN	CLOSED	OPEN	OPEN	OPEN	OPEN	CLOSED	OPEN	OPEN	OPEN	OPEN	OPEN

REV	DATE	BY	DESCRIPTION
0	04/12/05	MEM	MOVED UP EXT STEPS
A/01	07/22/04	JKZ	ORIGINAL DRAWING

SCALE: NOT TO SCALE

WARNING: 0 1/2 1 — IF THIS BAR DOES NOT MEASURE 1" THICK DRAWING IS NOT TO SCALE.

DESIGNED: JKZ
DRAWN: MEM
CHECKED: BJZ

THIS INFORMATION IS PROPRIETARY TO BASINWATER AND MAY NOT BE RELEASED WITHOUT BASINWATER PERMISSION

Basin Water

DRAWING No.: I-1

REGEN/RINSE FLOW SCHEMATIC

W:\Projects\Avondale-WEPS\Standard DHS Submittal\Section 6 - STD Regeneration & Rinsing Summary\I-1RevG.dwg, 4/12/2005 12:55:07 PM

EXT STEP 3 REGEN
SALT ADDITION, CONTACT TIME

SATURATED SALT	
SALT WATER MIXTURE	
CLEAN WATER	

	DIRECTION
REGEN 1	UP
REGEN 2	UP

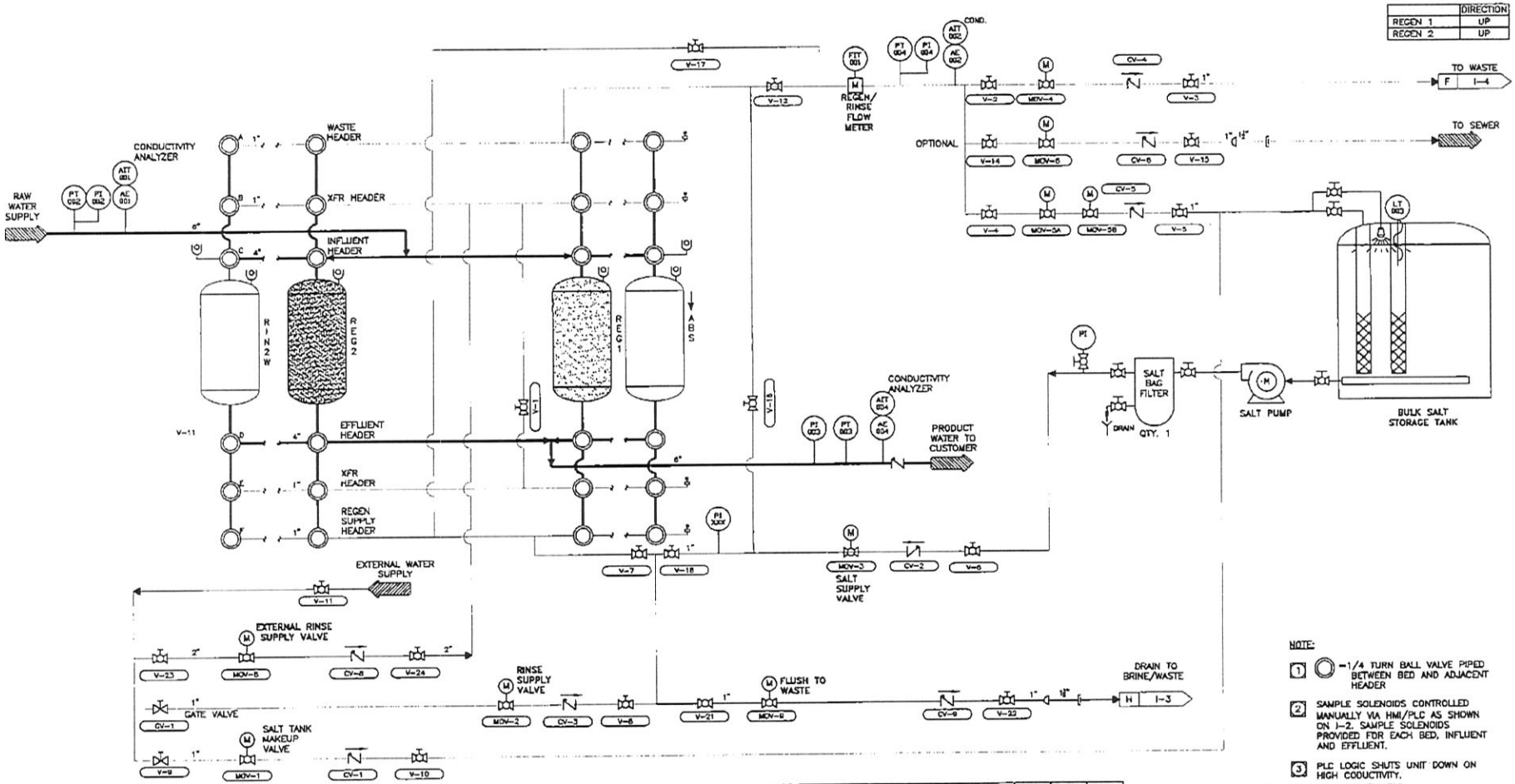

NOTE:

1. 1/4 TURN BALL VALVE PIPED BETWEEN BED AND ADJACENT HEADER
2. SAMPLE SOLENOIDS CONTROLLED MANUALLY VIA HMI/PLC AS SHOWN ON I-2. SAMPLE SOLENOIDS PROVIDED FOR EACH BED, INFLUENT AND EFFLUENT.
3. PLC LOGIC SHUTS UNIT DOWN ON HIGH CODUCTIVITY.

REGEN/RINSE FLOW SCHEMATIC

	V-1	V-2	V-3	V-4	V-5	V-6	V-7	V-8	V-9	V-10	V-11	V-12	V-14	V-15	V-16	V-17	V-18
UP FLOW	OPEN	OPEN	OPEN	OPEN	OPEN	OPEN	OPEN	OPEN	OPEN	OPEN	OPEN	OPEN	OPEN	OPEN	CLOSED	CLOSED	OPEN
DOWN FLOW	OPEN	OPEN	OPEN	OPEN	OPEN	OPEN	CLOSED	OPEN	OPEN	OPEN	OPEN	CLOSED	OPEN	OPEN	OPEN	OPEN	OPEN

REV	DATE	BY	DESCRIPTION
0	04/13/05	MEM	ADDED UP EXT STEPS
N/C	07/27/04	JKZ	ORIGINAL DRAWING

SCALE: NOT TO SCALE

WARNING: 0 1/2 1 — IF THIS BAR DOES NOT MEASURE 1" THEN DRAWING IS NOT TO SCALE.

DESIGNED JKZ
DRAWN MEM
CHECKED BJZ

THIS INFORMATION IS PROPRIETARY TO BASINWATER AND MAY NOT BE RELEASED WITHOUT BASINWATER PERMISSION

Basin Water

DRAWING No.: I-1

REGEN/RINSE FLOW SCHEMATIC

W:\Projects\Avondale-NEPS\Standard DHS Submittal\Section 6 - STD Regeneration & Rinsing Summary\I-1RevG.dwg, 4/12/2005 12:32:55 PM

EXT STEP 4 REGEN
TREATED WATER ADDITION, TO WASTE

S4-RGN1

S4-RGN2

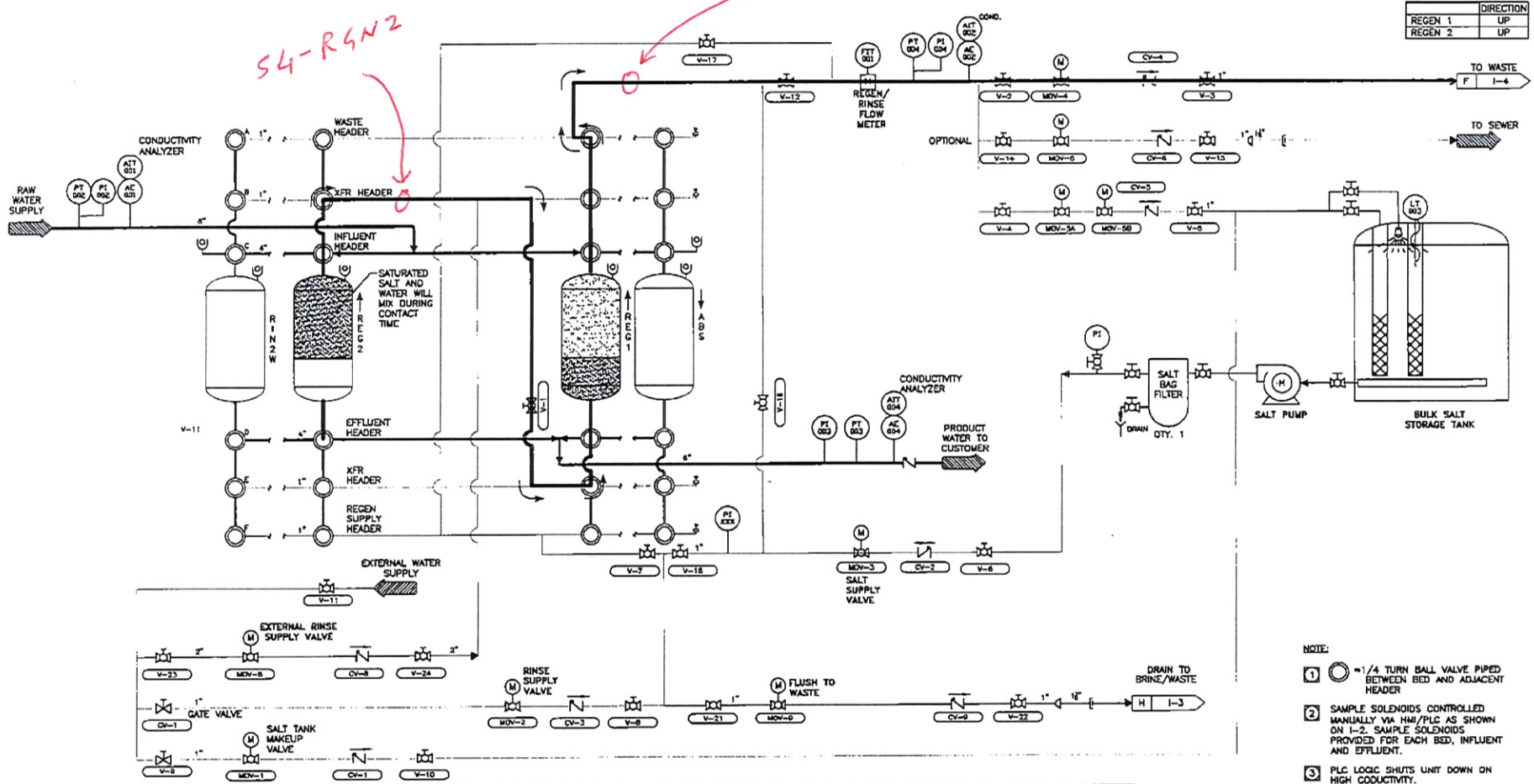

SATURATED SALT	
SALT WATER MIXTURE	
CLEAN WATER	

	DIRECTION
REGEN 1	UP
REGEN 2	UP

NOTE:

1. ⊙ = 1/4 TURN BALL VALVE PIPED BETWEEN BED AND ADJACENT HEADER
2. SAMPLE SOLENOIDS CONTROLLED MANUALLY VIA HMI/PLC AS SHOWN ON I-2. SAMPLE SOLENOIDS PROVIDED FOR EACH BED, INFLUENT AND EFFLUENT.
3. PLC LOGIC SHUTS UNIT DOWN ON HIGH CODUCTIVITY.

REGEN/RINSE FLOW SCHEMATIC

	V-1	V-2	V-3	V-4	V-5	V-6	V-7	V-8	V-9	V-10	V-11	V-12	V-14	V-15	V-16	V-17	V-18
UP FLOW	OPEN	OPEN	OPEN	OPEN	OPEN	OPEN	OPEN	OPEN	OPEN	OPEN	OPEN	OPEN	OPEN	OPEN	CLOSED	CLOSED	OPEN
DOWN FLOW	OPEN	OPEN	OPEN	OPEN	OPEN	OPEN	CLOSED	OPEN	OPEN	OPEN	OPEN	CLOSED	OPEN	OPEN	OPEN	OPEN	OPEN

REV	DATE	BY	DESCRIPTION
0	04/12/05	MEM	ADDED UP EXT STEPS
B/C	07/27/04	JKZ	ORIGINAL DRAWING

SCALE: NOT TO SCALE

WARNING: 0 1/2 1 — IF THIS BAR DOES NOT MEASURE 1" THEN DRAWING IS NOT TO SCALE.

DESIGNED: JKZ
DRAWN: MEM
CHECKED: BJZ

THIS INFORMATION IS PROPRIETARY TO BASINWATER AND MAY NOT BE RELEASED WITHOUT BASINWATER PERMISSION

Basin Water

DRAWING No.: I-1

REGEN/RINSE FLOW SCHEMATIC

W:\Proj\City of Avondale - HEPS\Permitting\Submittals\ADEQ Submittal\Section 6 - STD Regeneration & Rinsing Summary\text and etc\I-1RevG.dwg, 4/27/2005 2:51:16

EXT STEP 5 REGEN
WATER ADDITION, CONTACT TIME

SATURATED SALT	
SALT WATER MIXTURE	
CLEAN WATER	

	DIRECTION
REGEN 1	NONE
REGEN 2	NONE

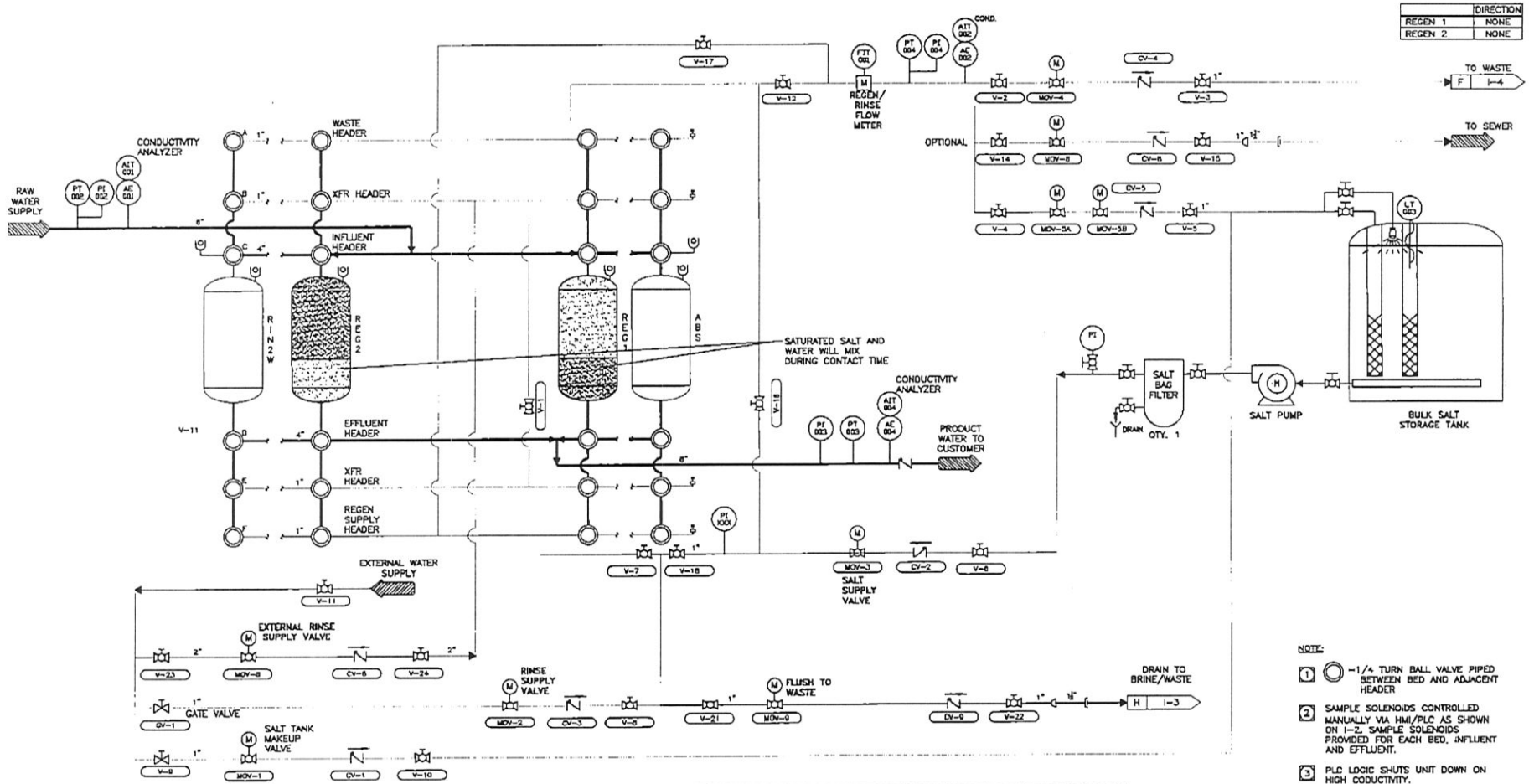

NOTE:

1. ◯ = 1/4 TURN BALL VALVE PIPED BETWEEN BED AND ADJACENT HEADER
2. SAMPLE SOLENOIDS CONTROLLED MANUALLY VIA HMI/PLC AS SHOWN ON I-2. SAMPLE SOLENOIDS PROVIDED FOR EACH BED, INFLUENT AND EFFLUENT.
3. PLC LOGIC SHUTS UNIT DOWN ON HIGH CODUCTIVITY.

REGEN/RINSE FLOW SCHEMATIC

	V-1	V-2	V-3	V-4	V-5	V-6	V-7	V-8	V-9	V-10	V-11	V-12	V-14	V-15	V-16	V-17	V-18
UP FLOW	OPEN	OPEN	OPEN	OPEN	OPEN	OPEN	OPEN	OPEN	OPEN	OPEN	OPEN	OPEN	OPEN	OPEN	CLOSED	CLOSED	OPEN
DOWN FLOW	OPEN	OPEN	OPEN	OPEN	OPEN	OPEN	CLOSED	OPEN	OPEN	OPEN	OPEN	CLOSED	OPEN	OPEN	OPEN	OPEN	OPEN

REV	DATE	BY	DESCRIPTION
B	04/12/05	MEW	ADDED UP EXT STEPS
A/C	07/27/04	JKZ	ORIGINAL DRAWING

SCALE: NOT TO SCALE

WARNING: 0 1/2 1 — IF THIS BAR DOES NOT MEASURE 1" THEN DRAWING IS NOT TO SCALE.

DESIGNED JKZ
DRAWN MEW
CHECKED BJZ

THIS INFORMATION IS PROPRIETARY TO BASINWATER AND MAY NOT BE RELEASED WITHOUT BASINWATER PERMISSION

Basin Water

DRAWING No.: I-1

REGEN/RINSE FLOW SCHEMATIC

W:\Projects\Avondale-NEPS\Standard DIIS Submittal\Section 6 - STD Regeneration & Rinsing Summary\I-1RevG.dwg, 4/12/2005 12:34:42 PM

STEP 6 RINSE
EXTERNAL SOURCE FLOW TO WASTE 1

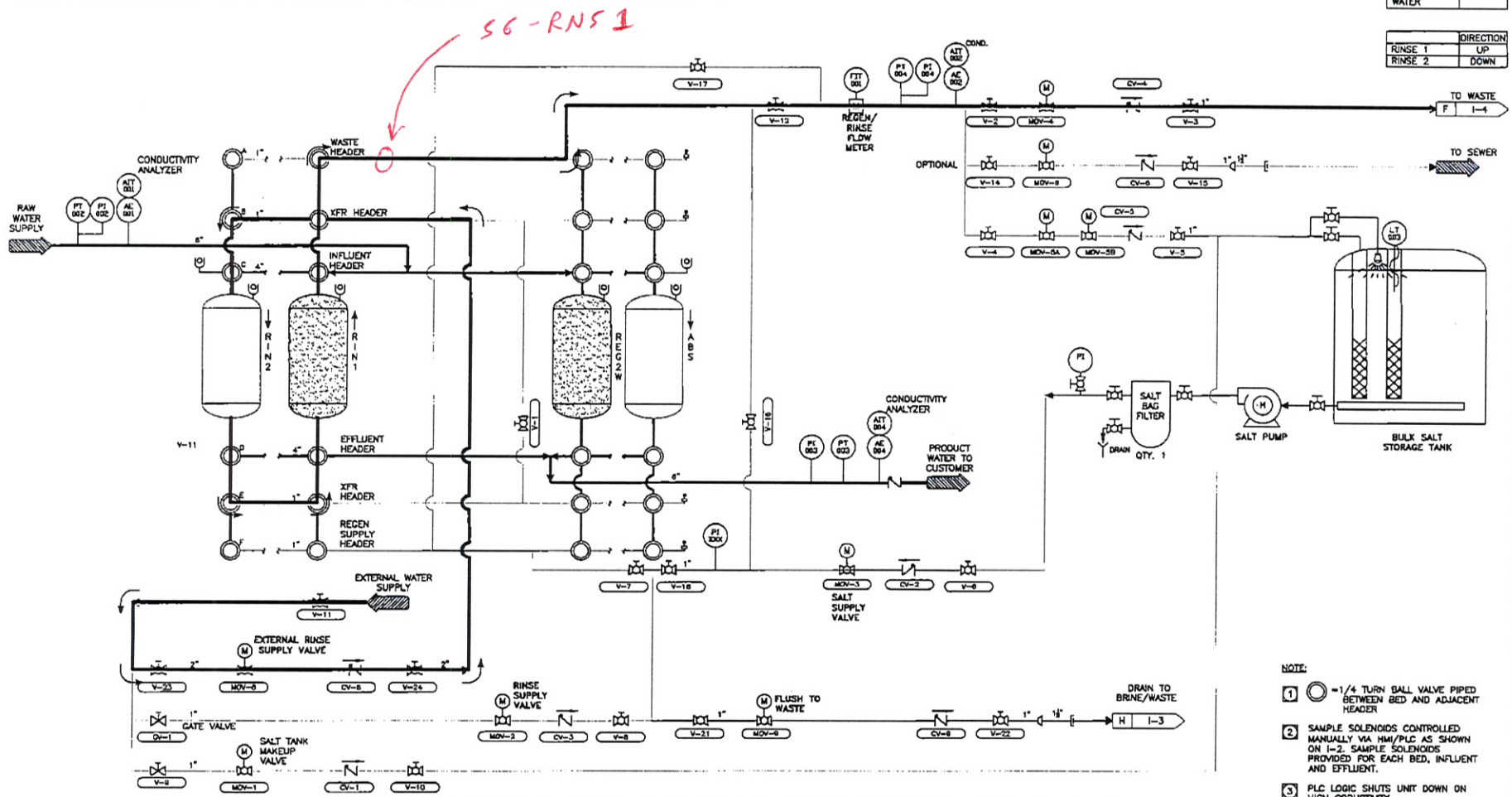

NOTE:

1. ⊗ = 1/4 TURN BALL VALVE PIPED BETWEEN BED AND ADJACENT HEADER
2. SAMPLE SOLENOIDS CONTROLLED MANUALLY VIA HMI/PLC AS SHOWN ON I-2. SAMPLE SOLENOIDS PROVIDED FOR EACH BED, INFLUENT AND EFFLUENT.
3. PLC LOGIC SHUTS UNIT DOWN ON HIGH CODUCTIVITY.

REGEN/RINSE FLOW SCHEMATIC

	V-1	V-2	V-3	V-4	V-5	V-6	V-7	V-8	V-9	V-10	V-11	V-12	V-14	V-15	V-16	V-17	V-18
UP FLOW	OPEN	OPEN	OPEN	OPEN	OPEN	OPEN	OPEN	OPEN	OPEN	OPEN	OPEN	OPEN	OPEN	OPEN	CLOSED	CLOSED	OPEN
DOWN FLOW	OPEN	OPEN	OPEN	OPEN	OPEN	OPEN	CLOSED	OPEN	OPEN	OPEN	OPEN	CLOSED	OPEN	OPEN	OPEN	OPEN	OPEN

REV	DATE	BY	DESCRIPTION
C	04/12/05	MEM	ADDED UP DIR STEPS
A/B	02/27/04	JKZ	ORIGINAL DRAWING

SCALE: NOT TO SCALE

WARNING: 0 1/2 1 — IF THIS BAR DOES NOT MEASURE 1 THEN DRAWING IS NOT TO SCALE.

DESIGNED JKZ
DRAWN MEM
CHECKED BJZ

THIS INFORMATION IS PROPRIETARY TO BASINWATER AND MAY NOT BE RELEASED WITHOUT BASINWATER PERMISSION

Basin Water

DRAWING No.: I-1

REGEN/RINSE FLOW SCHEMATIC

W:\Proj2\City of Avondale - NEPS\Permitting\Submittals\ADEQ Submittal\Section 6 - STD Regeneration & Rinsing Summary\I-1RevC.dwg, 4/27/2005 1:07:26 PM

STEP 7 RINSE
EXTERNAL SOURCE RECOVER TO SALT TANK

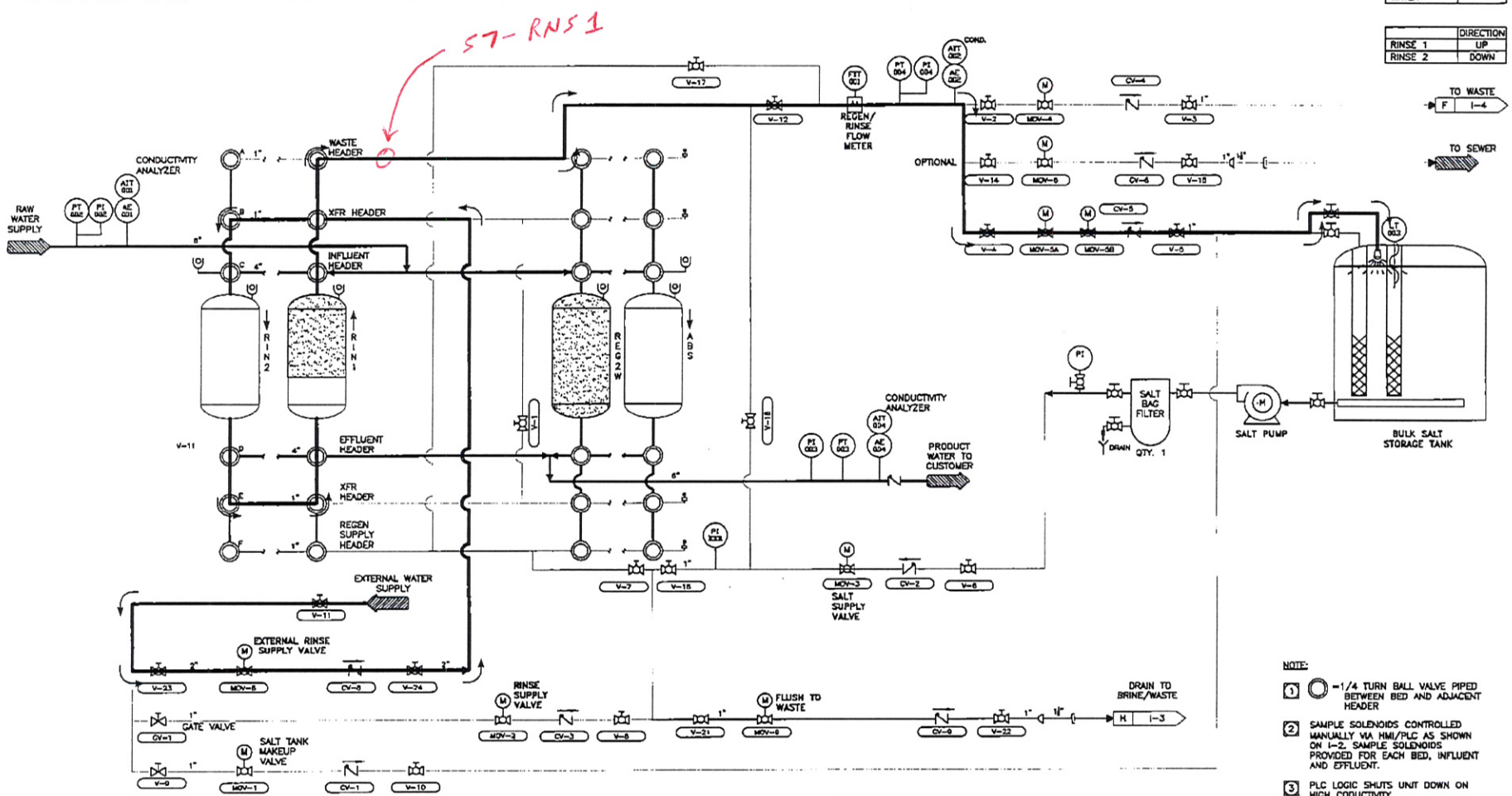

SATURATED SALT	
SALT WATER MIXTURE	
CLEAN WATER	

	DIRECTION
RINSE 1	UP
RINSE 2	DOWN

NOTE:

1. -1/4 TURN BALL VALVE PIPED BETWEEN BED AND ADJACENT HEADER
2. SAMPLE SOLENOIDS CONTROLLED MANUALLY VIA HMI/PLC AS SHOWN ON I-2. SAMPLE SOLENOIDS PROVIDED FOR EACH BED, INFLUENT AND EFFLUENT.
3. PLC LOGIC SHUTS UNIT DOWN ON HIGH CODUCTIVITY.

REGEN/RINSE FLOW SCHEMATIC

	V-1	V-2	V-3	V-4	V-5	V-6	V-7	V-8	V-9	V-10	V-11	V-12	V-14	V-15	V-16	V-17	V-18
UP FLOW	OPEN	OPEN	OPEN	OPEN	OPEN	OPEN	OPEN	OPEN	OPEN	OPEN	OPEN	OPEN	OPEN	OPEN	CLOSED	CLOSED	OPEN
DOWN FLOW	OPEN	OPEN	OPEN	OPEN	OPEN	OPEN	CLOSED	OPEN	OPEN	OPEN	OPEN	CLOSED	OPEN	OPEN	OPEN	OPEN	OPEN

REV	DATE	BY	DESCRIPTION
B	04/13/05	MEM	ADDED UP EXT STEPS
A/C	07/17/04	JKZ	ORIGINAL DRAWING

SCALE: NOT TO SCALE

WARNING 0 1/2 1 — IF THIS BAR DOES NOT MEASURE 1" THEN DRAWING IS NOT TO SCALE.

DESIGNED JKZ
DRAWN MEM
CHECKED BJZ

THIS INFORMATION IS PROPRIETARY TO BASINWATER AND MAY NOT BE RELEASED WITHOUT BASINWATER PERMISSION

Basin Water

DRAWING No.: I-1

REGEN/RINSE FLOW SCHEMATIC

W:\Proj2\City of Avondale - NEFS\Permitting\Submittals\ADEQ Submittal\Section 6 - STD Regeneration & Rinsing Summary\Text and etc\I-1Rev6.dwg, 4/27/2005 2:40:09

EXT STEP 8 RINSE
RAW WATER SOURCE FLOW TO WASTE 2

58-RNS 1

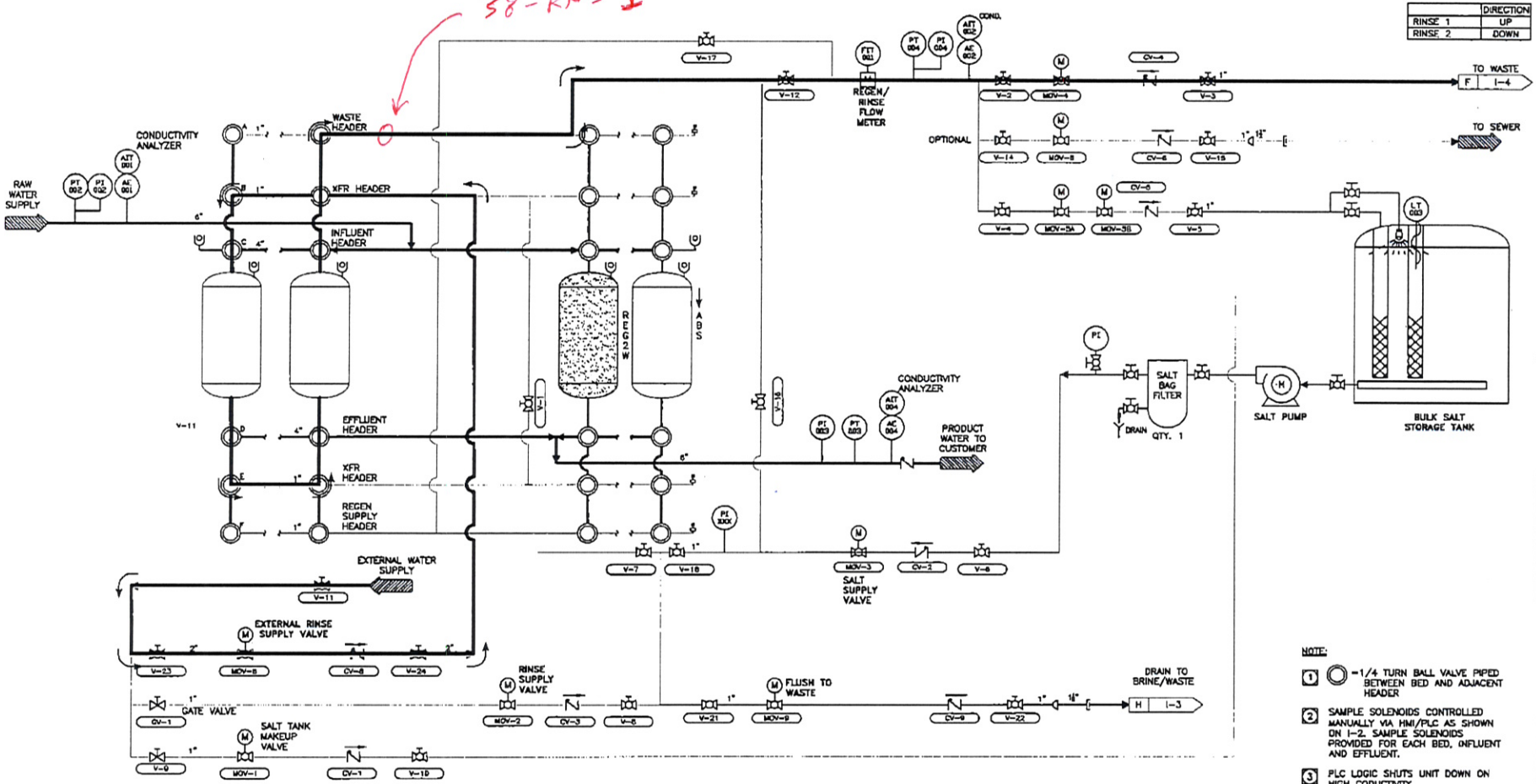

SATURATED SALT	
SALT WATER MIXTURE	
CLEAN WATER	

	DIRECTION
RINSE 1	UP
RINSE 2	DOWN

NOTE:

1. =1/4 TURN BALL VALVE PIPED BETWEEN BED AND ADJACENT HEADER
2. SAMPLE SOLENOIDS CONTROLLED MANUALLY VIA HMI/PLC AS SHOWN ON I-2. SAMPLE SOLENOIDS PROVIDED FOR EACH BED, INFLUENT AND EFFLUENT.
3. PLC LOGIC SHUTS UNIT DOWN ON HIGH CODUCTIVITY.

REGEN/RINSE FLOW SCHEMATIC

	V-1	V-2	V-3	V-4	V-5	V-6	V-7	V-8	V-9	V-10	V-11	V-12	V-14	V-15	V-16	V-17	V-18
UP FLOW	OPEN	OPEN	OPEN	OPEN	OPEN	OPEN	OPEN	OPEN	OPEN	OPEN	OPEN	OPEN	OPEN	OPEN	CLOSED	CLOSED	OPEN
DOWN FLOW	OPEN	OPEN	OPEN	OPEN	OPEN	OPEN	CLOSED	OPEN	OPEN	OPEN	OPEN	CLOSED	OPEN	OPEN	OPEN	OPEN	OPEN

REV	DATE	BY	DESCRIPTION
0	04/13/03	MEM	ADDED UP EXT STEPS
A/C	07/07/04	JKZ	ORIGINAL DRAWING

SCALE: NOT TO SCALE

WARNING: 0 1/2 1 — IF THIS BAR DOES NOT MEASURE 1" THEN DRAWING IS NOT TO SCALE.

DESIGNED: JKZ
DRAWN: MEM
CHECKED: BJZ

THIS INFORMATION IS PROPRIETARY TO BASINWATER AND MAY NOT BE RELEASED WITHOUT BASINWATER PERMISSION

Basin Water

DRAWING No.: I-1

REGEN/RINSE FLOW SCHEMATIC

W:\Projects\Avondale-NEPS\Standard DHS Submittal\Section 6 - STD Regeneration & Rinsing Summary\I-1RevG.dwg, 4/12/2005 12:46:11 PM

February 2013

Wellhead Treatment Study
Project# 13659C
Treatment Testing Protocol for Garden Lakes Nitrate Treatment Facility
City of Avondale

Test 1 - Establish Break-through Curve

1. Break-though curves will be established for two vessels, one from each bank (north and south banks as shown on the attached floor plan).
2. Tests will be performed on the north bank vessel on Day 1 and the south bank vessel on Day 2. One vessel from each bank will be selected for testing based on regeneration status and run time. Vessels with zero run time (immediately following regeneration/rinse) will be selected for testing (this information can be obtained from PLC).
3. For each vessel, Samples will be collected as per Tables 1 and 2 as follows:

nitrate + nitrite

Table 1: Break-through Curve for the Vessel from the North Bank

Date & Time	Hour	Well Water			Treated Water		
		Nitrate	Sulfate	Chromium	Nitrate	Sulfate	Chromium
	15 Min	X			X	X	X
	4 hr				X	X	
	8 hr				X	X	X
	12 hr				X	X	
	16 hr	X	X	X	X	X	X
	18 hr				X	X	
	20 hr				X	X	X
	22 hr				X	X	
	24 hr				X	X	X
	26 hr				X	X	

X indicates "Sample needs to be collected".

nitrate + nitrite

Table 2: Break-through Curve for the Vessel from the South Bank

Date & Time	Hour	Well Water			Treated Water		
		Nitrate	Sulfate	Chromium	Nitrate	Sulfate	Chromium
	15 Min	X			X	X	X
	4 hr				X	X	
	8 hr				X	X	X
	12 hr				X	X	
	16 hr	X	X	X	X	X	X
	18 hr				X	X	
	20 hr				X	X	X
	22 hr				X	X	
	24 hr				X	X	X
	26 hr				X	X	

X indicates "Sample needs to be collected".

4. Samples shall be labeled as follows: "Bank Location - Sample Type - Time"
   Abbreviations to be used:
   Well Sample: W
   Treated Water: T
   North Bank: NB
   South Bank: SB

   Example:
   Treated water sample collected at North Bank after 1 hr shall be labeled as "NB-T-1hr".

Test 2 - Determine Brine Concentration

1. Collect a brine sample which is getting fed into a vessel (Regen 2 Vessel) during regeneration cycle. This sample will be tested for Na and Cl contents (will need to provide lab with dilution factor based on expected concentration). This test can be performed either along with Test 1 or independently.

Test 3 - Regeneration & Rinse Streams Characterization

1. At present, the regeneration/rinse cycle is performed in eight steps (Steps 1 thru 5 for Regeneration, and Steps 6 to 8 for Rinse) as follows:

   - Step 1: Salt Addition - Recover to Salt Tank.
   - Step 2: Salt Addition - To Waste.
   - Step 3: Salt Addition - Contact Time.
   - Step 4: Water Addition.
   - Step 5: Water Addition - Contact Time.
   - Step 6: Flow to Waste.
   - Step 7: Recover to Salt Tank.
   - Step 8: Flow to Waste.

2. For the regeneration/rinse cycle, Samples will be collected as per Table 3.
3. The regeneration/rinse characterization tests will be performed for two sets of vessels, one set of vessels from each bank. As regeneration cycle includes two vessels in series, these two vessels are referred as "one set".
4. Tests will be performed on a set of north bank vessels on Day 1 and on a set of south bank vessels on Day 2. A set of vessels from each bank will be selected based on run time/Regen status. Out of two vessels selected in a set, one vessel shall be ready for Regen 1 step and another vessel shall be ready for Regen 2 step (this information can be obtained from PLC).
5. Apart from above samples, a composite spent brine sample will also be collected from the waste tank.

North Bank Vessel Break-through Curve

Date & Time	Hour	Well Water			Treated Water			
		Nitrate	Sulfate	Chromium	Nitrate	Sulfate	Total Chromium	Chromium-VI
4/4/2013	15 Min	11.8	-	-	2.25	< 5	< 0.005	
	4 hr	-	-	-	X	X	-	
	8 hr	-	-	-	X	X	X	X
	12 hr	-	-	-	X	X	-	
	16 hr	X	X	X	X	X	X	X
	18 hr	-	-	-	X	X	-	
	20 hr	-	-	-	X	X	X	X
	22 hr	-	-	-	X	X	-	
	24 hr	-	-	-	X	X	X	X
	26 hr	-	-	-	X	X	-	

X indicates "Sample needs to be collected".

South Bank Vessel Break-through Curve

Date & Time	Hour	Well Water			Treated Water			
		Nitrate	Sulfate	Chromium	Nitrate	Sulfate	Total Chromium	Chromium-VI
2/28/2013	15 Min	12.3	-	-	12.3	< 5	< 0.005	
2/28/2013	4 hr	-	-	-	2.87	28.1	-	
2/28/2013	8 hr	-	-	-	3.21	82.6	< 0.005	
4/3/2013	12 hr	-	-	-	6.2	100	-	
	16 hr	X	X	X	X	X	X	X
	18 hr	-	-	-	X	X	-	
	20 hr	-	-	-	X	X	X	X
	22 hr	-	-	-	X	X	-	
	24 hr	-	-	-	X	X	X	X
	26 hr	-	-	-	X	X	-	

X indicates "Sample needs to be collected".

APPENDIX C

GATEWAY TESTING PROTOCOL

March 2013
Revised

Wellhead Treatment Study
Project# 13659C
Treatment Testing Protocol for Gateway Nitrate Treatment Facility
City of Avondale

Test 1 - Establish Break-through Curve

1. Break-though curves will be established for two vessels, one from each bank (north and south banks as shown on the attached floor plan).
2. Test will be performed on the north bank vessel on Day 1 and on the south bank vessel on Day 2. One vessel from each bank will be selected for testing based on regeneration status and run time. Vessels with zero run time (immediately following regeneration/rinse) will be selected for testing (this information can be obtained from PLC).
3. For each vessel, Samples will be collected as per Tables 1 and 2 as follows:

Table 1: Break-through Curve for the Vessel from the North Bank

Date & Time	Hour	Well Water			Treated Water		
		Nitrate+Nitrite	Sulfate	Arsenic	Nitrate+Nitrite	Sulfate	Arsenic
	15 Min	X			X	X	X
	1 hr				X	X	
	2 hr				X	X	
	3 hr				X	X	
	4 hr	X	X	X	X	X	X
	5 hr				X	X	
	6 hr				X	X	
	7 hr				X	X	
	8 hr				X	X	X
	9 hr				X	X	

X indicates "Sample needs to be collected".

Table 2: Break-through Curve for the Vessel from the South Bank

Date & Time	Hour	Well Water			Treated Water		
		Nitrate+Nitrite	Sulfate	Arsenic	Nitrate+Nitrite	Sulfate	Arsenic
	15 Min	X			X	X	X
	1 hr				X	X	
	2 hr				X	X	
	3 hr				X	X	
	4 hr	X	X	X	X	X	X
	5 hr				X	X	
	6 hr				X	X	
	7 hr				X	X	
	8 hr				X	X	X
	9 hr				X	X	

X indicates "Sample needs to be collected".

4. Samples shall be labeled as follows: "Bank Location - Sample Type - Time"
   Abbreviations to be used:
   Well Sample: W
   Treated Water: T
   North Bank: NB
   South Bank: SB

   Example:
   Treated water sample collected at North Bank after 1 hr shall be labeled as "NB-T-1hr".

Test 2 - Determine Brine Concentration

1. Collect a brine sample which is getting fed into a vessel (Regen 2 Vessel) during regeneration cycle. This sample will be tested for Na and Cl contents (will need to provide lab with dilution factor based on expected concentration). This test can be performed either along with Test 1 or independently.

Test 3 - Regeneration & Rinse Streams Characterization

1. At present, the regeneration/rinse cycle is performed in eight steps (Steps 1 thru 5 for Regeneration, and Steps 6 to 8 for Rinse) as follows:

   - Step 1: Salt Addition - Recover to Salt Tank.
   - Step 2: Salt Addition - To Waste.
   - Step 3: Salt Addition - Contact Time.
   - Step 4: Water Addition.
   - Step 5: Water Addition - Contact Time.
   - Step 6: Flow to Waste.
   - Step 7: Recover to Salt Tank.
   - Step 8: Flow to Waste.

2. For the regeneration/rinse cycle, Samples will be collected as per Table 3.
3. The regeneration/rinse characterization tests will be performed for two sets of vessels, one set of vessels from each bank. As the regeneration cycle includes two vessels in series, these two vessels together is referred as "one set".
4. Tests will be performed on a set of north bank vessels on Day 1 and on a set of south bank vessels on Day 2. A set of vessels from each bank will be selected based on run time/Regen status. Out of two vessels selected in a set, one vessel shall be ready for Regen 1 step and another vessel shall be ready for Regen 2 step (this information can be obtained from PLC).
5. Apart from above samples, a composite spent brine sample will also be collected from the

Table 3: Regen/Rinse Streams Characterization

Date & Time	Steps	Tag ID	Flow Stream or Sample Location	Start of Step	Middle of Step	End of Step	Analytical Parameters
	Step 1: Salt Addition - Recover to Salt Tank	S1-RGN2	Flow coming out of Regen 2 Vessel	X	X	X	Arsenic, TDS
	Step 2: Salt Addition - To Waste	S2-RGN2	Flow coming out of Regen 2 Vessel		X	X	Arsenic, TDS
		S2-RGN1	Flow coming out of Regen 1 Vessel	X	X	X	Arsenic, TDS
	Step 3: Salt Addition - Contact Time		No Sampling				
	Step 4: Water Addition	S4-RGN2	Flow coming out of Regen 2 Vessel		X		Arsenic, TDS
		S4-RGN1	Flow coming out of Regen 1 Vessel		X		Arsenic, TDS
	Step 5: Water Addition - Contact Time		No Sampling				
	Step 6: Flow to Waste	S6-RNS1	Flow coming out of Rinse 1 Vessel		X		Arsenic, TDS
	Step 7: Recover to Salt Tank	S7-RNS1	Flow coming out of Rinse 1 Vessel		X		Arsenic, TDS
	Step 8: Flow to Waste	S8-RNS1	Flow coming out of Rinse 1 Vessel		X		Arsenic, TDS
	Composite Spent Brine		Waste Tank	X			Arsenic, TDS
	Brine Sample		Brine Feed Line	X			Na, Cl

X indicates "Sample needs to be collected".
S1 - Step 1, S2 - Step 2, and so forth
RGN - Regeneration, RNS - Rinse

waste tank.

6. Above samples will be analyzed for parameters as mentioned in Table 3.
7. For each of the above step, sample locations are shown on the attached "Process Flow Diagram".
8. Samples shall be labeled as follows: "Bank Location - Tag ID - Cycle Status". Tag IDs are listed in Table 3.

   Abbreviations to be used:

North Bank	NB
South Bank	SB
Start of Step	S
Middle of Step	M
End of Step	E

   Example:
   Sample collected during Step 1 at the middle of the cycle shall be labeled as "NB-S1-RGN2–M".

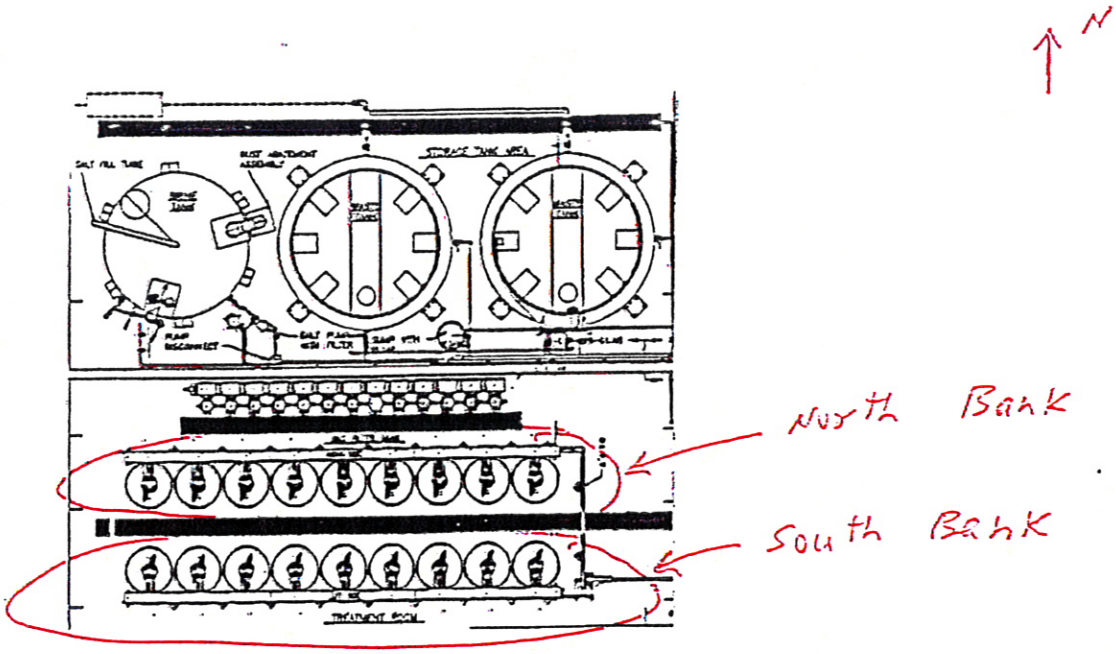

Gateway Site Nitrate Treatment Facility

STEP 1 REGEN

SALT ADDITION, RECOVER TO SALT TANK

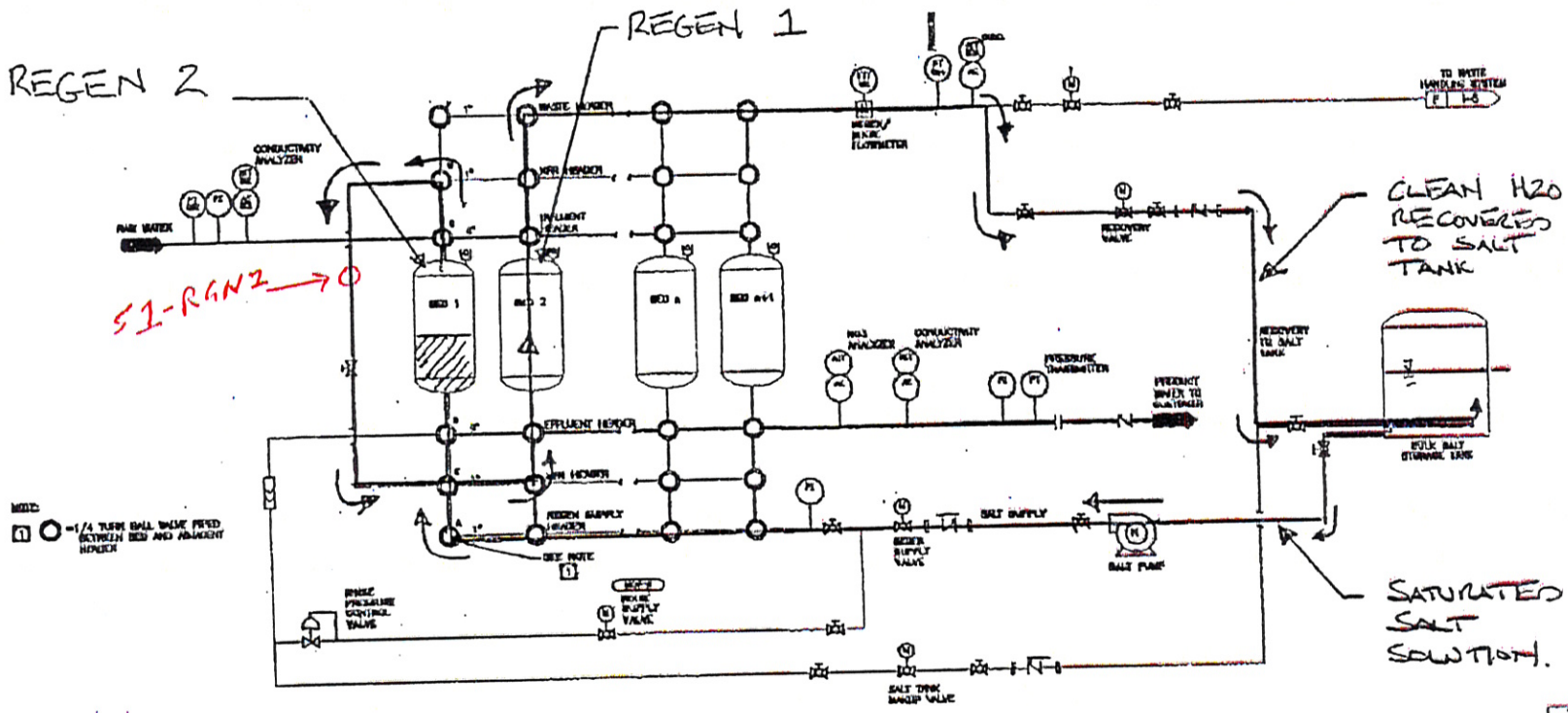

STEP 2 REGEN

SALT ADDITION, TO WASTE

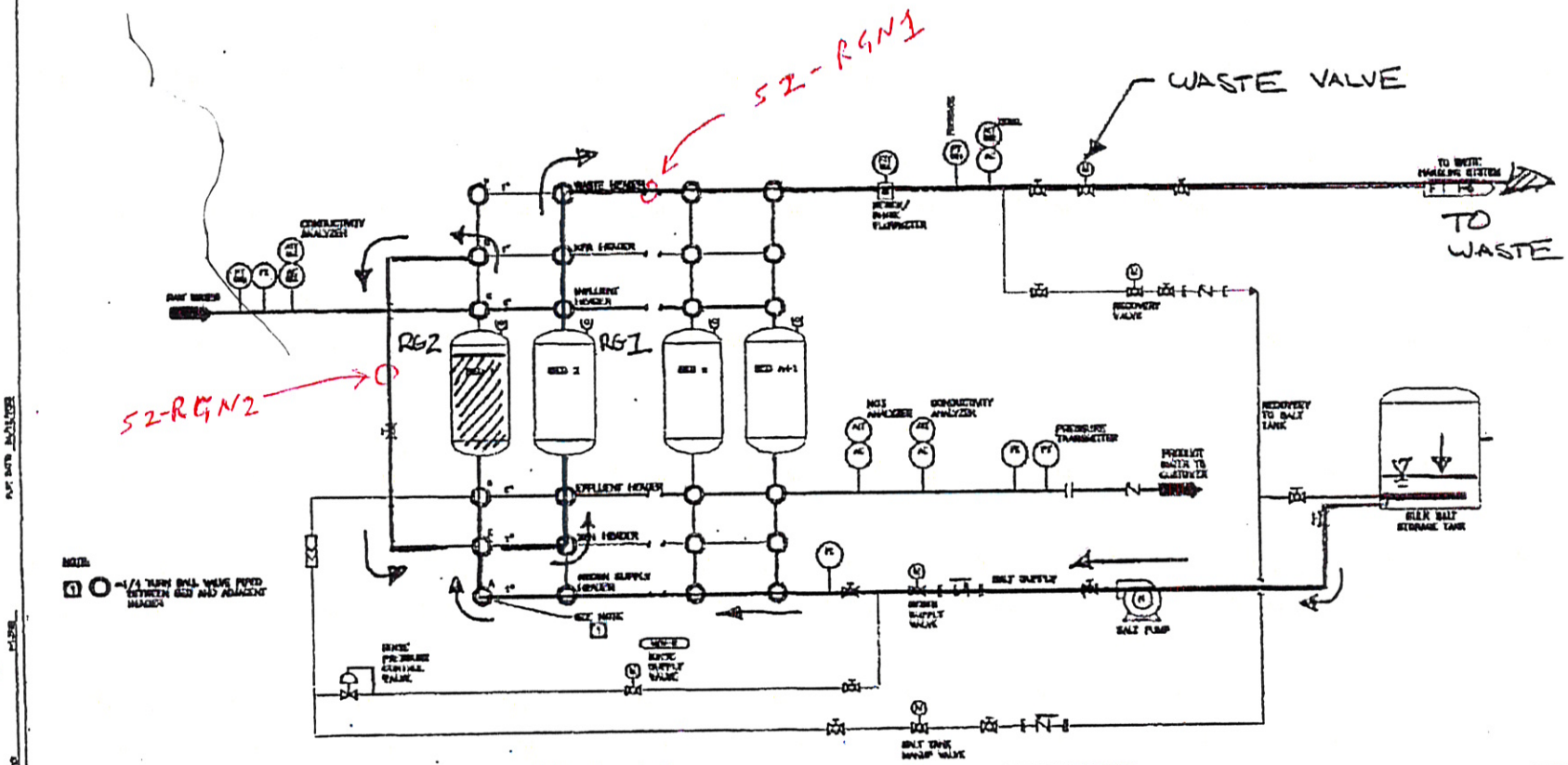

Basin Water

REGEN/RINSE FLOW SCHEMATIC

STEP 3 REGEN

SALT ADDITION, CONTACT TIME

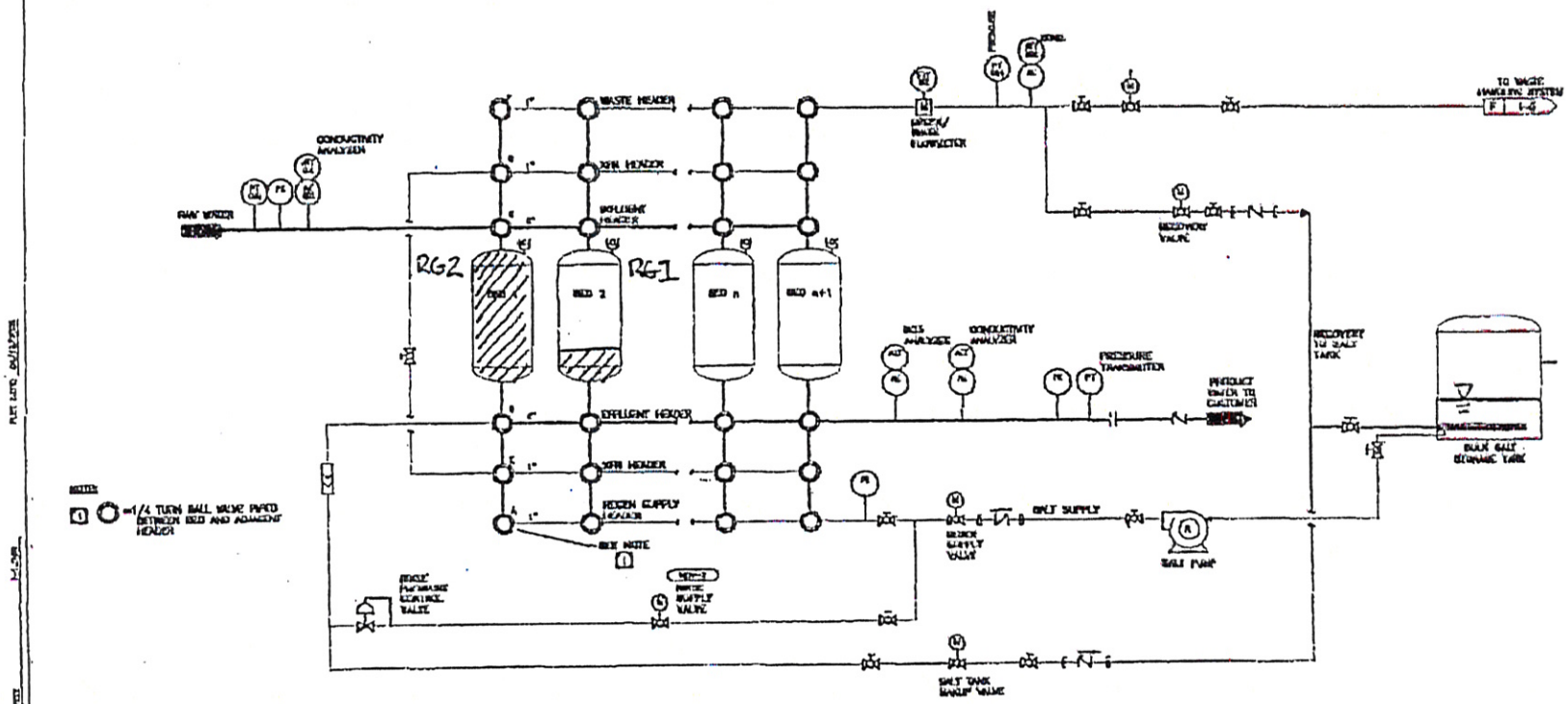

Basin Water

REGEN/RINSE FLOW SCHEMATIC

TYP

STEP 4 REGEN

WATER ADDITION

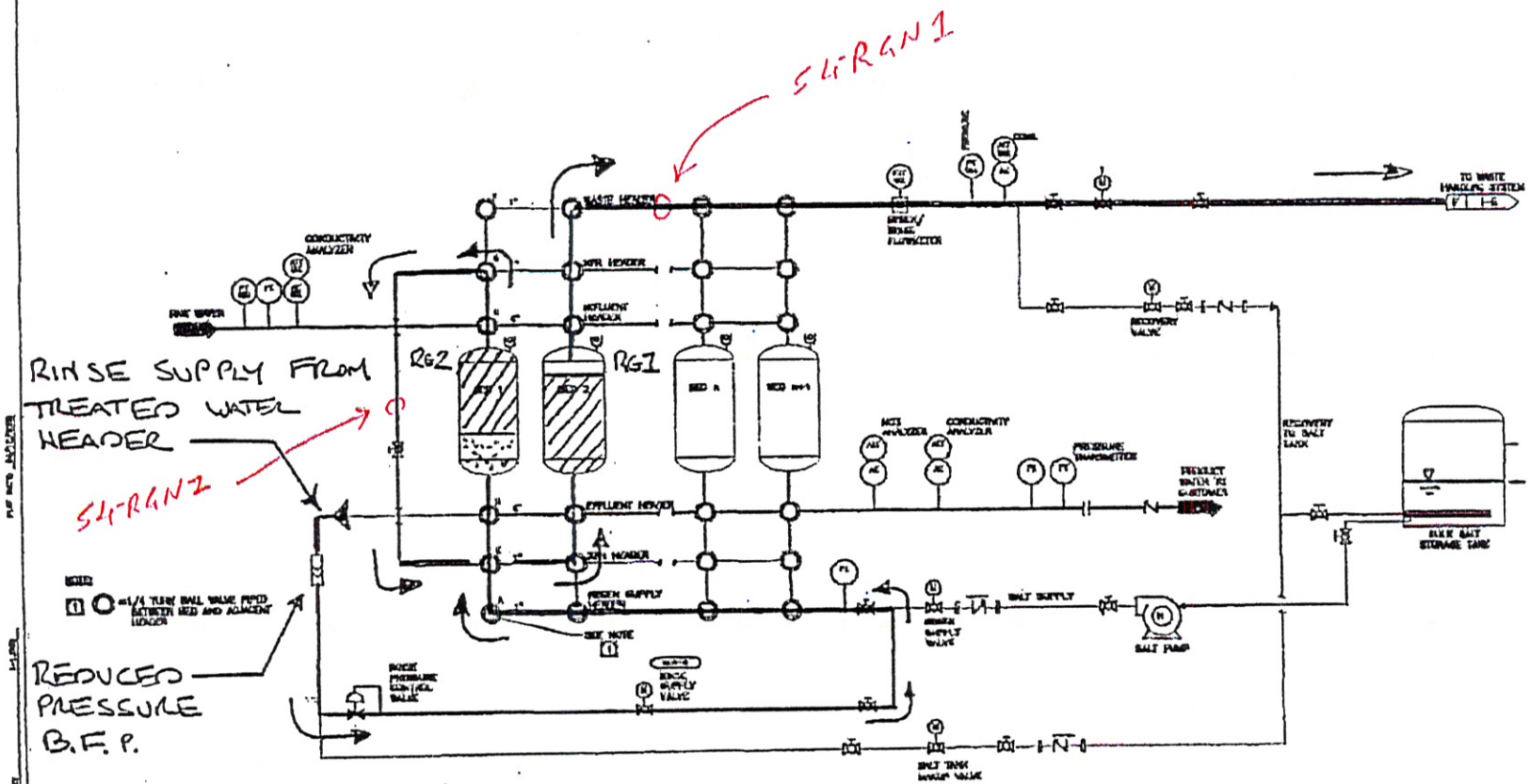

STEP #5 REGEN

WATER ADDITION, CONTACT TIME

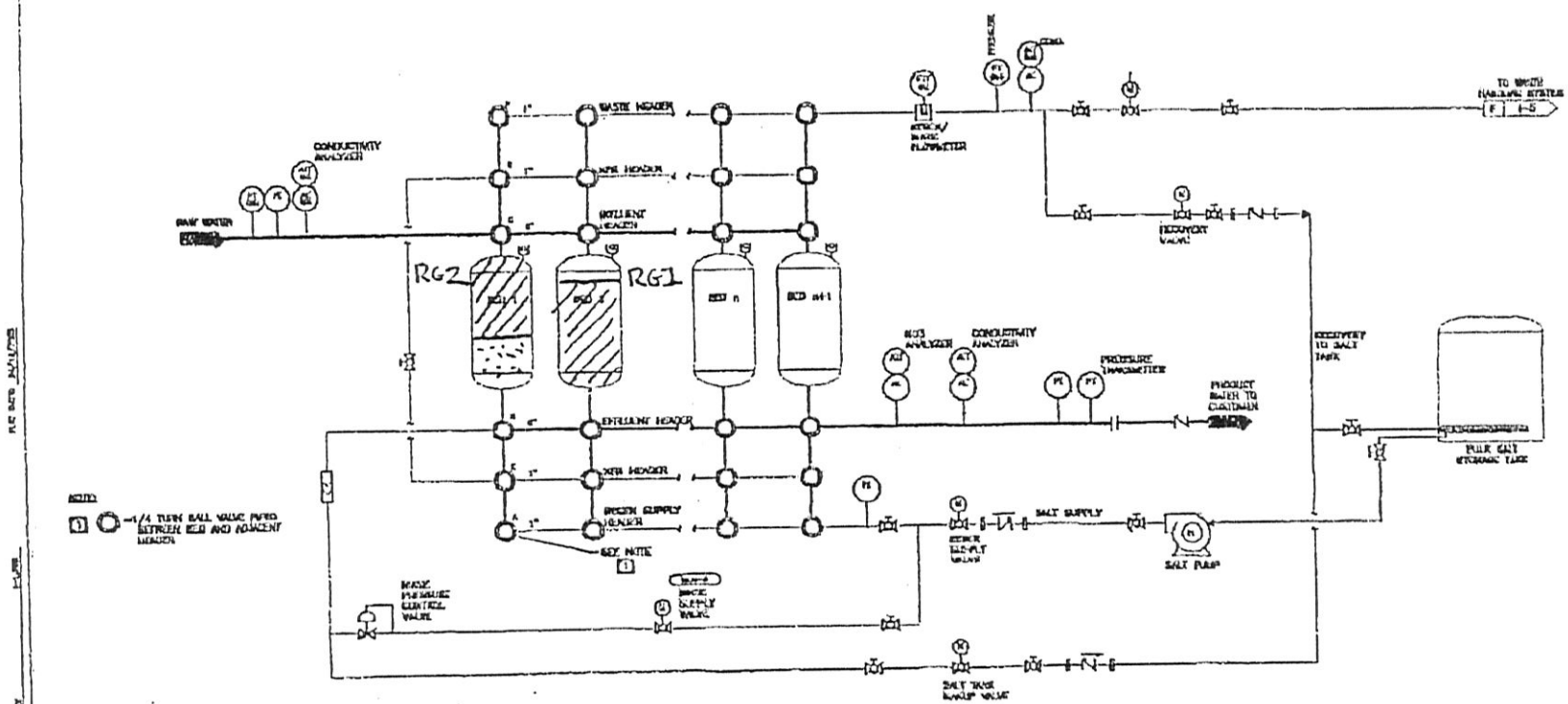

STEP 6 RINSE

FLOW TO WASTE 1

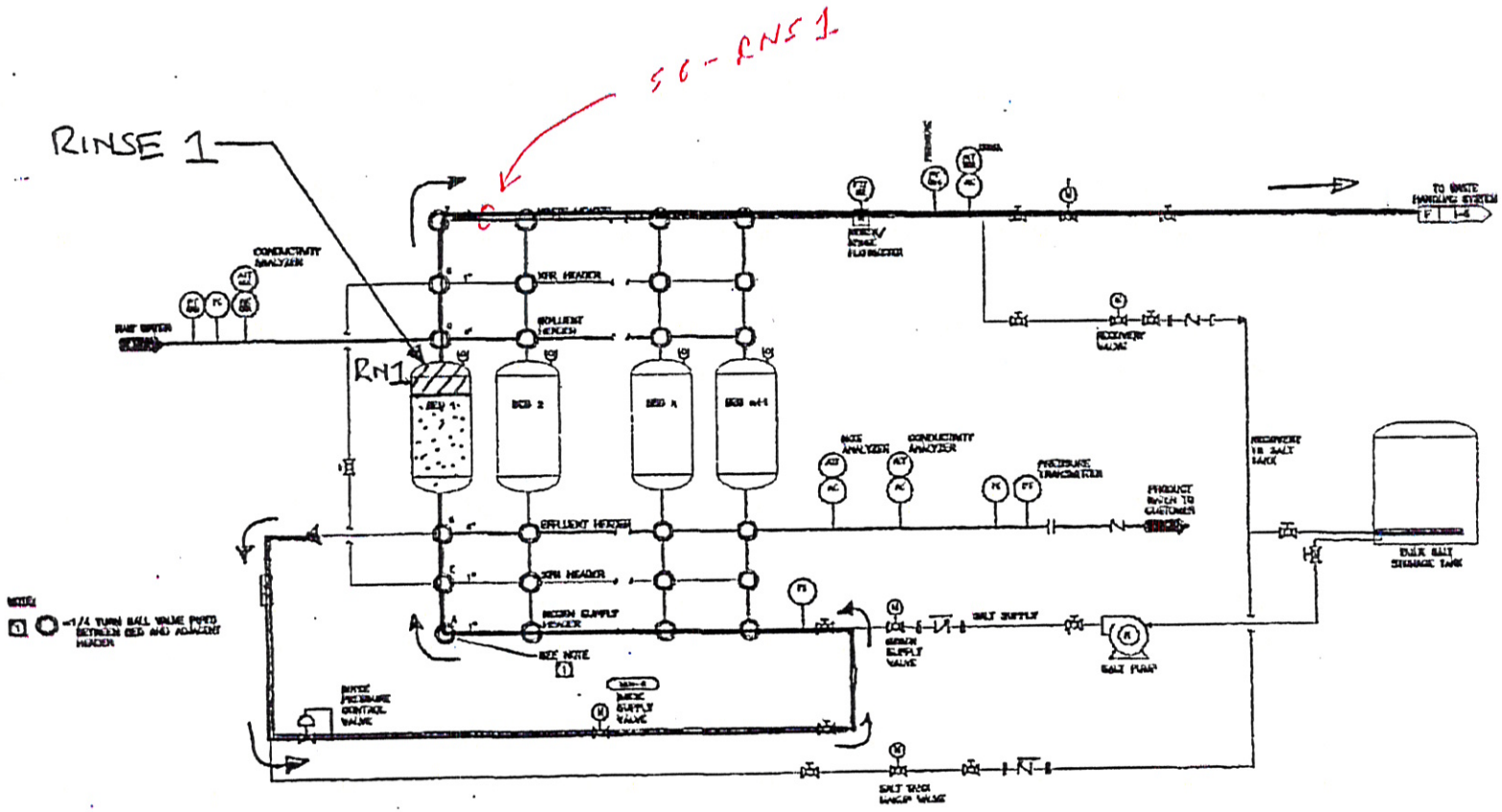

Basin Water

ION EXCHANGE WATER UNIT - WHOLE

RESIN/RINSE FLOW SCHEMATIC

TYP

STEP 7 RINSE

RECOVER TO SALT TANK

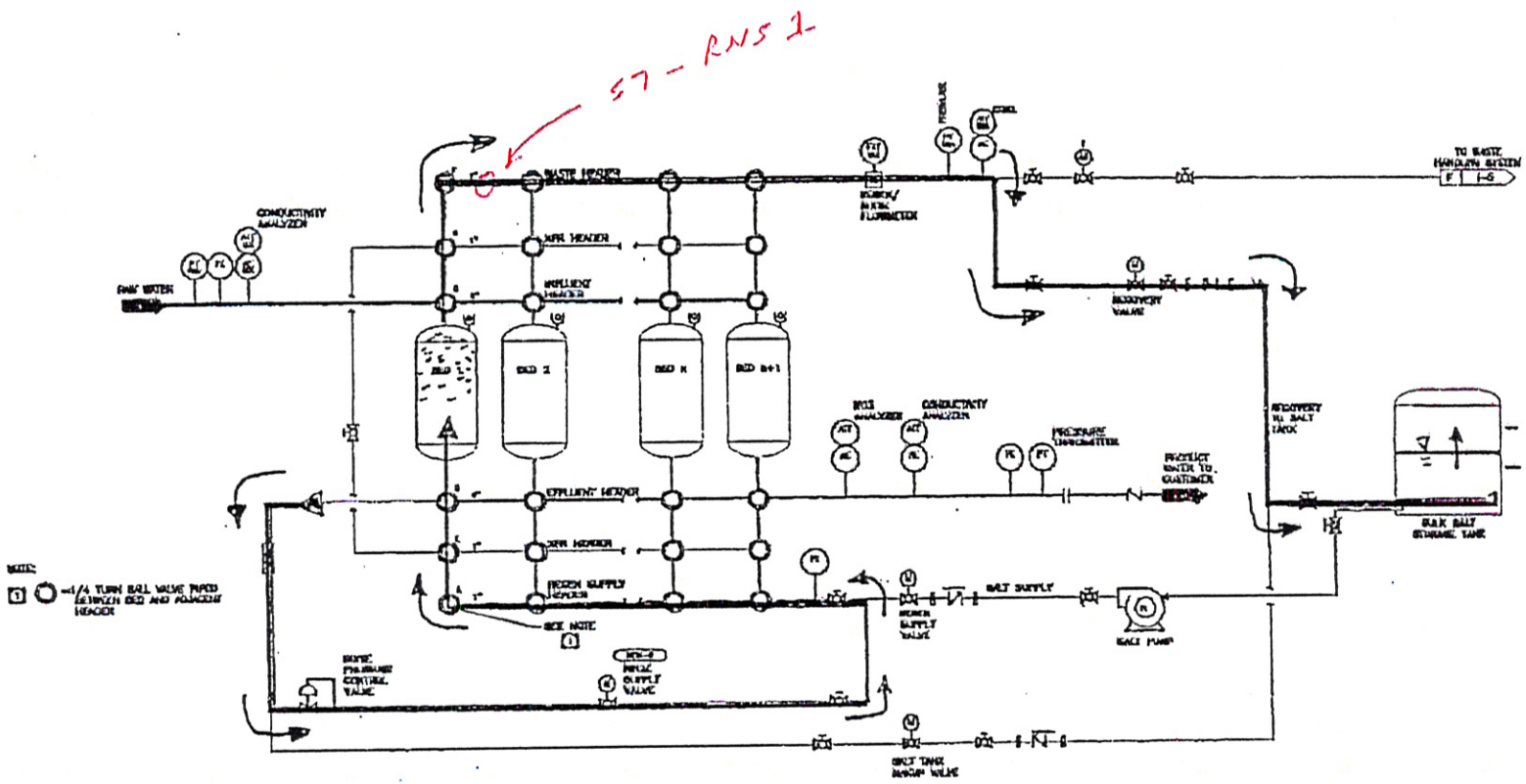

STEP 8 RINSE
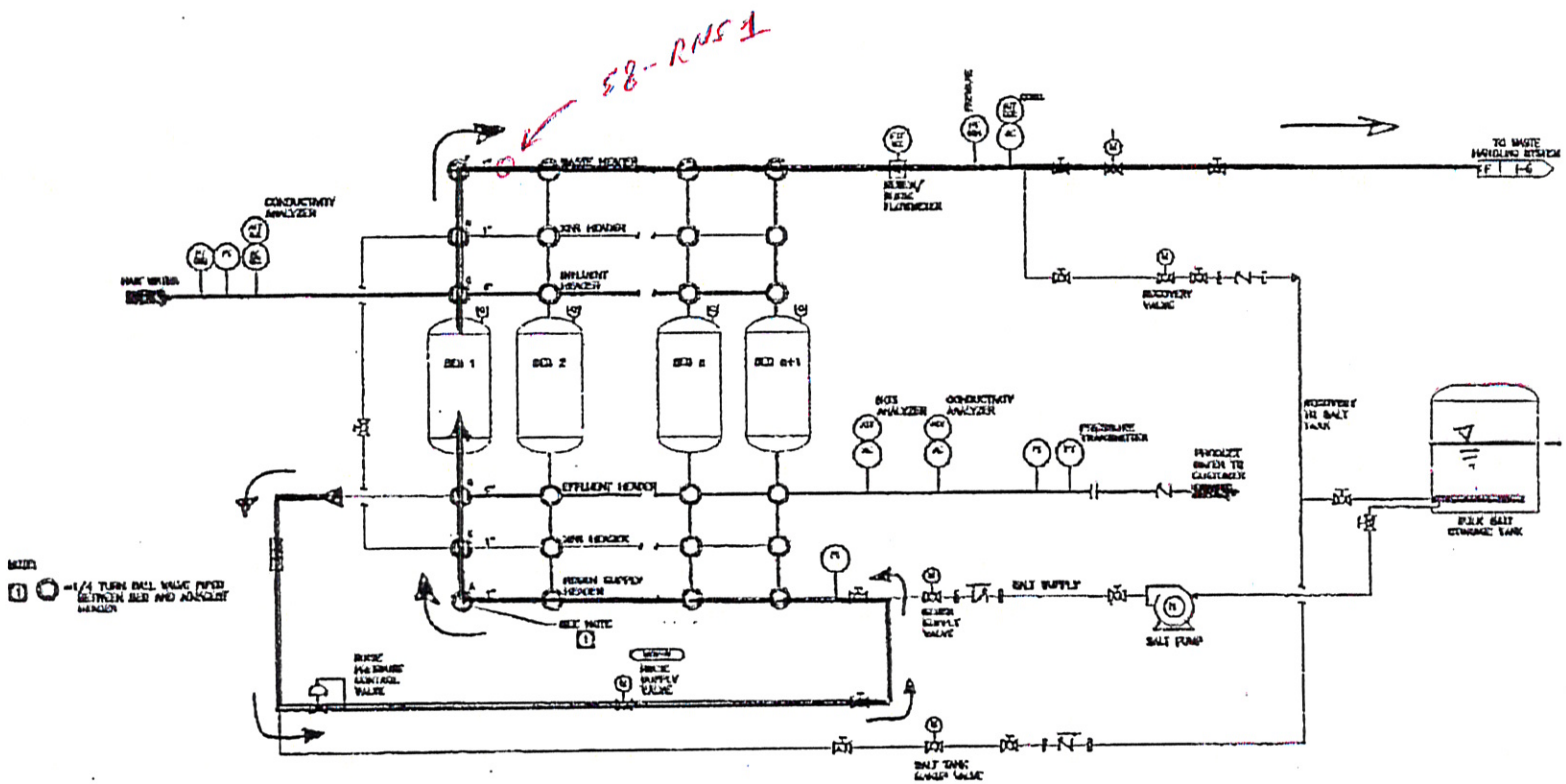
RINSE TO WASTE 2